Tektronix®

COMMITTED TO EXCELLENCE

485/R485

OSCILLOSCOPE

SERVICE

INSTRUCTION MANUAL

http://manoman.sqhill.com

TEKTRONIX®

485/R485
OSCILLOSCOPE

SERVICE

INSTRUCTION MANUAL

Tektronix, Inc.
P.O. Box 500
Beaverton, Oregon 97005

Serial Number _____

070-1193-00

http://manoman.sqhill.com

TABLE OF CONTENTS

SECTION 1	SPECIFICATION	Page
	Introduction	1-1
	Vertical Deflection System	1-1
	Probe Performance	1-3
	A and B Triggering	1-3
	Horizontal Deflection	1-4
	Calibrated Sweep Delay	1-4
	X-Y	1-5
	CRT	1-5
	Calibrator	1-6
	Other Characteristics	1-6
	Environmental Characteristics	1-6
SECTION 2	OPERATING INSTRUCTIONS	
	General	2-1
	Preliminary Information	2-1
	Controls and Connections	2-1
	Front Panel	2-1
	Rear Panel	2-4
	Bottom Side	2-4
SECTION 3	CIRCUIT DESCRIPTION	
	Introduction	3-1
	50 Ω Attenuator	3-1
	1 Megohm Buffer Amplifier	3-1
	50 Ω Overload Protection	3-1
	Vertical Preamplifier	3-1
	Signal Channel Switch	3-2
	Internal Trigger Amplifier	3-2
	Main Vertical Amplifier	3-2
	Scale Factor Readout	3-3
	Vertical Mode Control	3-3
	Z Axis	3-3
	A Trigger Amplifier	3-3
	A EXT Trigger Identify	3-3
	A Trigger Generator	3-4
	B Trigger Generator	3-4
	A and B Sweeps	3-4
	Horizontal Amplifier	3-5
	Horizontal Control	3-5
	Power Inverter/Regulator	3-6
	Line Filter	3-6
	Line Input Circuit	3-6
	Start Network	3-7
	Inverter	3-8
	Inverter/Regulator	3-8
	Inverter Current Limiting Circuit	3-8
	Overvoltage Stop Circuit	3-8
	Line Stop Circuit and Surge Limiting	3-8
	Procedure for Converting the 485 to DC Operation	3-9
	Low Voltage Supplies	3-9
	Power Supply Protection Circuit	3-10
	Stop Monostable	3-10
	Balance Node	3-10
	Overcurrent Protection	3-12
	Low Line Voltage Protection	3-12
	Sampling Period Timer and Over-Voltage Protection	3-12
	CRT Circuit	3-12
	Filament Voltage	3-12
	High Voltage Supplies	3-12
	Anode Supply	3-12
	Cathode Supply	3-12
	Cathode Regulator	3-12
	Grid DC Restorer	3-13
	Focus DC Restorer	3-13
	Beam Current Limit	3-14
	Power Supply Shutdown Caused by Excessive Beam Current	3-14
	CRT Control Circuits	3-14
	Auto Focus Circuit	3-14
	Calibrator	3-15
SECTION 4	MAINTENANCE	
	Introduction	4-1
	Cover Removal and Reinstallation	4-1
	Cleaning	4-1
	Lubrication	4-2
	Visual Inspection	4-3
	Semiconductor Checks	4-3
	Recalibration	4-3
	Troubleshooting	4-3
	Introduction	4-3
	Troubleshooting Aids	4-3
	Circuit Boards	4-3
	Troubleshooting Equipment	4-5
	Troubleshooting Techniques	4-6
	Special Troubleshooting Information	4-7
	Corrective Maintenance	4-11
	Obtaining Replacement Parts	4-11
	Soldering Techniques	4-11
	Component Replacement	4-12
	Circuit Board Replacement	4-12
	Timing Board Removal	4-12
	Transformer Board Removal	4-13
	Inverter Board Removal	4-14
	Semiconductor Replacement	4-14
	Circuit Board Pins	4-14
	End Lead Pin Connectors	4-15
	Cathode Ray Tube Replacement	4-15
	Repackaging for Shipment	4-15
	Interboard Comb Connection Locations	4-16
SECTION 5	CALIBRATION	
	Introduction	5-1
	TEKTRONIX Field Service	5-1
	Using This Procedure	5-1
	Test Equipment Required	5-1
	Special Calibration Fixtures	5-1
	Calibration Equipment Alternatives	5-4
	Performance Check	5-4
	Calibration Procedure	5-8
SECTION 6	RACKMOUNTING	
	Introduction	6-1
	Rack Dimensions	6-1
	Slide Out Tracks	6-1
	Mounting Procedure	6-1
	Alternate Rear Mounting Methods	6-2
	Removing or Installing the Instrument	6-2
	Slide Out Track Lubrication	6-2
SECTION 7	ELECTRICAL PARTS LIST	
SECTION 8	DIAGRAMS AND CIRCUIT BOARD ILLUSTRATIONS	
SECTION 9	MECHANICAL PARTS LIST	
	CHANGE INFORMATION	

http://manoman.sqhill.com

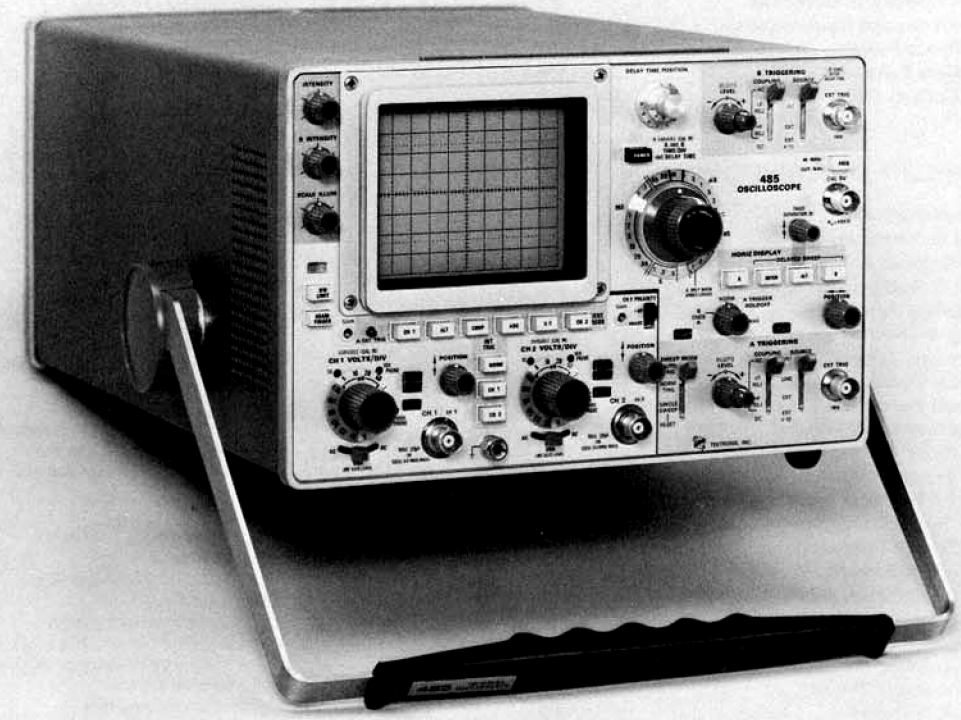

The 485 Portable Oscilloscope.

http://manoman.sqhill.com

SPECIFICATION

Introduction

The 485/R485 is a general-purpose, environmentalized, high-performance, portable, wide-band oscilloscope which has a dual-channel vertical amplifier with selectable input impedance (DC to 350 MHz bandwidth with 50 Ω input impedance; DC to 250 MHz bandwidth with 1 MΩ input impedance). The 485 has a 1 ns sweep rate, stable triggering to bandwidth limits and calibrated X-Y capabilities. Delayed sweep has calibrated delay time, can be triggered after delay and can be displayed with the intensified main sweep in an alternate sweep switching display. Additional features are X10, X100 probe scale factor readout, 8 div X10 div graticule area, small spot size and high writing rate. A 20 MHz bandwidth limiter, 1 MHz and 1 kHz fast-rise calibrator and autofocus are also included. The 50 Ω input is automatically disconnected from excessive voltages. An external trigger view feature is also provided. The 485-1 and 485-2 have no external trigger view. The 485-2 has only 50 Ω vertical input impedance.

ELECTRICAL CHARACTERISTICS

VERTICAL DEFLECTION SYSTEM (2 identical channels)

Selectable Input Impedance

50 Ω within 0.5%. VSWR ≤1.25:1 on 5 mV/div and 10 mV/div, 1.15:1 from 20 mV to 5 V/div to 350 MHz.

1 MΩ within 1% paralleled by approximately 20 pF.

Bandwidth[1] and Risetime[2] (VARIABLE gain CALIBRATED[3]) From 50 Ω Terminated Source −15°C to +35°C

From 50 Ω terminated source −15°C to +35°C.

50 Ω DC to at least 350 MHz, 1 ns

1 MΩ DC to at least 250 MHz, 1.4 ns

[1] Bandwidth (BW) measured at −3 dB down.

[2] Risetime calculated from 0.35/BW. From +35°C to +55°C, BW is 300 MHz for 50 Ω and 200 MHz for 1 MΩ.

[3] See Fig. 1-1 for effect of VARIABLE gain control.

Input Coupling Selection

AC; DC; GND (provides zero reference, precharges coupling capacitor, disconnects 50 Ω load in 50 Ω mode).

Lower −3 dB Point (AC coupling from 50 Ω source)

50 Ω input, 1 kHz or less.

1 MΩ input 1X, 10 Hz or less.

Deflection Factor

5 mV/div to 5 V/div in 10 calibrated steps (1-2-5 sequence), accurate within 2%. Uncalibrated, continuously variable between steps to at least 12.5 V/div. Lights at edge of knob skirts indicate correct deflection factor for 1X, 10X and 100X probes.

Gain can be recalibrated at front panel. 1 MΩ BAL is available at bottom panel to eliminate step attenuator shift above 10 mV/div, in the 1 MΩ mode.

Display Modes

Channel 1; Alternate; Chopped (approximately 1 MHz rate); Added; X-Y (CH 1 −Y and CH 2 −X); Channel 2 (+Up or Inverted).

Internal Trigger Source

Normal (displayed signal), Channel 1 or Channel 2 signal.

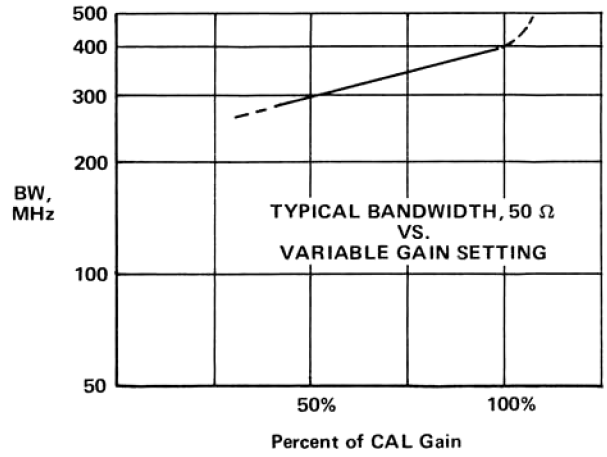

Fig. 1-1. Typical Bandwidth, 50 Ω vs. Variable Gain Setting (varies considerably depending on instrument SN)

http://manoman.sqhill.com

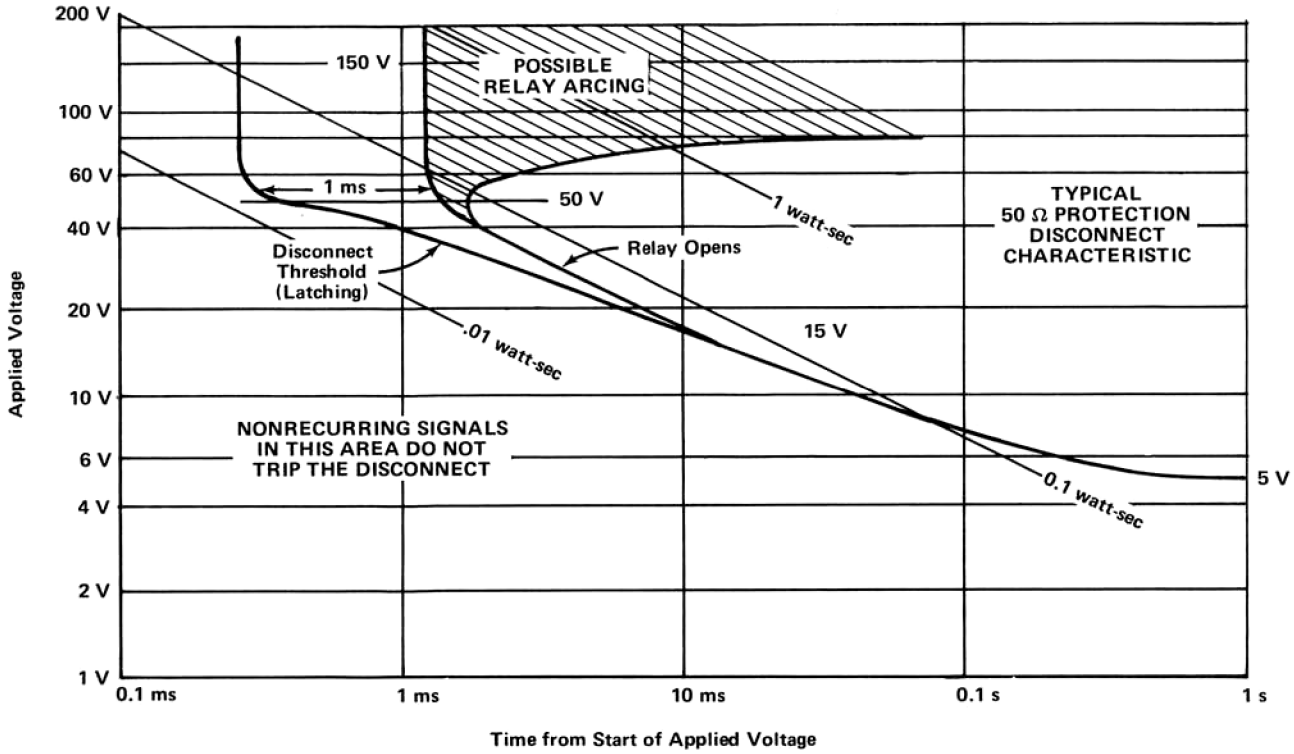

Fig. 1-2. Typical 50 Ω Protection Disconnect Characteristic.

50 Ω Protection

Internal detection circuitry automatically disconnects excessive signals of up to 50 V. The disconnected condition is indicated, and has manual reset.

Maximum Input Voltage

50 Ω Disconnect occurs for voltages that exceed approximately 5 V RMS continuous or 0.1 watt-second for instantaneous voltages of 5 V to 50 V.

Repeated application of voltages in excess of 50 volts and greater than 0.1 watt-second will cause deterioration of K1S1 relay contacts, due to arcing. Signals in excess of 150 volts will damage the instrument.

1 MΩ-DC coupled 250 V (DC + peak AC), 500 V P-P to 1 kHz. AC coupled 500 V (DC + peak AC), 500 V P-P to 1 kHz.

Common Mode Rejection

Added Mode with Channel 2 inverted. At least 10:1 at 50 MHz for 8-division signal after adjusting CH 2 gain for best CMR at 50 kHz and 20 mV/div.

Bandwidth Limiter

Limits to approximately 20 MHz the Vertical Amplifier and Internal Trigger signals.

Channel Isolation

At least 30:1 at 350 MHz.

A Ext Trigger Display (R485 and 485 only)

Momentary pushbutton in VERT MODE area enables display of EXT A Trigger when A source is in EXT position. Deflection factor is approximately 50 mV/div. Risetime is approximately 1.5 ns. Delay match to CH 1 or CH 2 input is within 0.5 ns at 50% amplitude. Triggering level is within 0.5 div of center-screen.

Probe Power

Two 4-pin connectors at the rear of the instrument provide power suitable for optional active probes such as the P6201.

http://manoman.sqhill.com

PROBE PERFORMANCE

(Probes are Optional Accessories)

Type		Atten.	Input Impedance	Lower −3 dB point (maximum)	Bandwidth with 485 (minimum)	Temperature Range for this Bandwidth Specification
For Use With 50 Ω Input						
P6056	010-6056-03 – 6 ft. 010-6056-05 – 9 ft.	10X	500 Ω 1 pF	200 Hz	350 MHz	
P6057	010-6057-03 – 6 ft. 010-6057-05 – 9 ft.	100X	5 kΩ 1 pF	20 Hz	350 MHz	−15°C to +35°C
P6201 (FET Probe)	010-6201-01 – 6 ft.	.1X Plug- 10X On 100X	100 kΩ 3 pF 1 MΩ <1.5 pF 1 MΩ <1.5 pF	10 Hz 1 Hz 10 Hz	330 MHz	0°C to +35°C
For Use With 1 MΩ Input						
P6053A	010-6053-11 – 3 1/2 ft. 010-6053-13 – 6 ft. 010-6053-15 – 9 ft.	10X	1 MΩ 9.5 pF 1 MΩ 12 pF 1 MΩ 13.5 pF	1 Hz	250 MHz 250 MHz 200 MHz	−15°C to +35°C

A and B TRIGGERING

A Trigger Mode

NORMAL.

Sweep runs only when triggered.

AUTOMATIC.

Sweep free-runs in the absence of a triggering signal and for signals below 20 Hz.

SINGLE SWEEP.

Sweep runs one time on the first triggering event after pressing the reset selector.

B Trigger Mode

B RUNS AFTER DELAY TIME.

Starts automatically at the end of the delay time.

B TRIGGERABLE AFTER DELAY TIME.

Runs when triggered. The B (delayed) sweep runs once, in each of these modes, following the A sweep delay time.

Time Base A and B Trigger Sensitivity

Trigger Mode	To 50 MHz	At 350 MHz
DC Int	0.3 div	1.5 div
DC Ext	20 mV	100 mV
AC	Signals below 16 Hz are attenuated.	
LF Reject	Signals below 16 kHz are attenuated.	
HF Reject	Signals below 16 Hz and above 50 kHz are attenuated.	

Level and Slope

Internal, permits selection of triggering point at any level on the positive and negative slope of the displayed waveform. External, level is adjustable through at least ±0.5 V for either polarity (±5 V for EXT ÷10).

A Source

Internal, Line, External, External ÷10.

http://manoman.sqhill.com

B Source

B runs after Delay Time, Internal, External, External ÷10.

External Inputs

1 MΩ paralleled by approximately 20 pF. Maximum input voltage 500 V (DC + peak AC), 500 V P-P to 1 kHz.

Jitter

Less than 0.1 ns at 350 MHz and 1 ns/div.

HORIZONTAL DEFLECTION

Time Base A and B

1 ns/div to 0.5 s/div in 27 calibrated steps (1-2-5 sequence). Uncalibrated, A is continuously variable between steps and to at least 1.25 s/div.

Time Base A and B Sweep Accuracy (Center 8 screen divisions)

Sweep Rate	+15°C to +35°C	−15°C to +55°C
1 ns/div to 20 ns/div	±3%	±5%
50 ns/div to 0.1 s/div	±2%	±4%
0.2 s/div to 0.5 s/div	±3%	±5%

Display Modes

A, A INTENsified during B delayed, ALTernate display of A INTEN and B (delayed sweep). Only A sweep is displayed for A sweep rates of 1, 2 and 5 ns/div.

Minimum Sweep Holdoff (A Trigger Holdoff in Norm detent)

A Time Setting	
1 ns/div to 0.1 μs/div	Less than 0.4 μs.
0.2 μs/div	Less than 1.0 μs.
0.5 μs/div to 0.5 s/div	Less than 2 times the A TIME/DIV setting.

A Trigger Holdoff

Adjustable control permits a stable presentation of repetitive complex waveforms. The control covers at least the time of one full sweep for sweeps faster than 0.2 s/div.

B Ends A

The A sweep is reset at the end of the B sweep to allow the fastest possible sweep repetition rate for increased trace intensity in the delayed sweep mode.

CALIBRATED SWEEP DELAY

Delay Time Range

0 to 9.9 times the Delay Time/Div settings of 10 ns/div to 0.5 s/div.

Differential Delay Time Accuracy (+15°C to +35°C)

Exclude the first (above 0.0) 1.0 turn or the first 40 ns of the DELAY dial.

DELAY TIME Setting	
10 ns/div and 20 ns/div	± (1% of measurement +0.2% of full scale[3])
50 ns/div to 1 ms/div	± (0.5% of measurement +0.1% of full scale)
2 ms/div to 0.5 s/div	± (1% of measurement +0.1% of full scale)

[3] Full scale is 10X the Delay Time/Div Setting.

http://manoman.sqhill.com

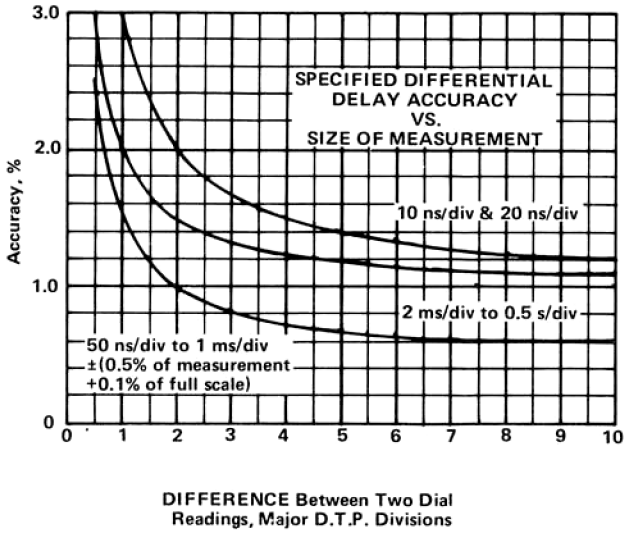

Fig. 1-3. Specified Differential Delay Accuracy vs. Size of Measurement.

Jitter

Less than 0.005% (one part in 20,000) of full scale plus 0.2 ns. (Wrap-around cover must be in place.)

X-Y

Full Sensitivity

(CH 1 Vert, CH 2 Horizontal.) 5 mV/div to 5 V/div in 10 calibrated steps (1-2-5 sequence) accurate within 2%. Gain can be recalibrated at front panel.

Y Performance

Identical to CH 1. See Vertical Deflection.

X-Axis Bandwidth

DC to 4 MHz (with 10 div reference signal).

X-Y Phase Match (Full BW and BW Limit)

Within 3° to 4 MHz.

X-Gain Match to CH 2

+15°C to +35°C: 1%

−15°C to +55°C: 3%

CRT

TEKTRONIX CRT

4-inch rectangular tube; 8X 10 divisions (0.8 cm/div) display area. P31 phosphor normally supplied; P11 optional without extra charge. 21 kV accelerating potential.

Photographic Writing Speed

At least 3 div/ns for standard P31 phosphor; at least 6 div/ns for optional P11 phosphor (with the TEKTRONIX C-31-R Camera and POLAROID 10,000 ASA film).

Auto Focus

Automatically maintains beam focus for all intensity settings. (Intensified zone and EXT Z axis are not auto-focused).

Graticule

Internal, no parallax. Variable edge-lighting. Markings for measurement of risetime. Graticule is dark with illumination off.

Beam Finder

Limits display within graticule area.

External Z-Axis

Risetime 15 ns. Input R 500 Ω. +0.2 V (DC to 20 MHz) blanks trace of average intensity. +2 V (DC to 2 MHz) blanks maximum intensity trace.

Beam Current Limit

Automatically limits the average beam current to protect the CRT phosphor. (Limits average current to 20 μA for sweep rates faster than 50 ms/div; 5 μA for 50 ms/div and slower sweep rates and for X-Y. Backup system shuts down power supply if average current reaches approximately 30 μA.)

http://manoman.sqhill.com

CALIBRATOR

Two-Frequency Fast-Rise Calibrator

Accuracies	+15°C to +35°C	−15°C to +55°C
5 V amplitude to 1 MΩ load	0.5%	1%
0.5 V amplitude to 50 Ω ±0.5% load	1%	1.5%
50 mA amplitude to optional BNC accessory current loop	1%	1.5%
Selectable Frequency of 1 MHz and 1 kHz	0.25%	0.5%

Output Resistance

450 Ω

Risetime

Positive edge into 50 Ω, less than 1 ns. Overshoot and ringing less than 2% into 50 Ω at 1 GHz bandwidth.

1 kHz Duty Cycle

49.8% to 50.2%

OTHER CHARACTERISTICS

Signal Outputs

Positive gates from both time bases (approximately 4 V), and a positive-going Sawtooth from Time Base A (approximately 10 V). Gates and Sawtooth are approximately 0.5 V amplitude into 50 Ω.

Power Requirement

Two-position line voltage selector 115 V (90 V to 136 V) and 230 V (180 V to 272 V) 48 to 440 Hz. 60 watts maximum at 115 V and 60 Hz. 0.9 A maximum at 115 V and 60 Hz. Line fuse: 3 A fast.

Cooling

Quiet, filtered, forced-air ventilation. Fan speed increases smoothly with increasing ambient temperature.

ENVIRONMENTAL CHARACTERISTICS

Ambient Temperature

Operating: −15°C to +55°C

Storage: −35°C to +75°C

Altitude

Operating: to 15,000 feet. Maximum allowable ambient temperature decreased by 1°C per 1000 feet from 5,000 to 15,000 feet.

Nonoperating: to 50,000 feet.

Vibration[5]

Operating: 15 minutes along each of the three axis, 0.025 inch peak-to-peak displacement (4 g's at 55 Hz) 10 to 55 to 10 Hz in 1-minute cycles.

Shock[5]

Operating and Nonoperating: 30 g's, one half sine, 11-ms duration, 2 shocks per axis in each direction for a total of 12 shocks.

Electromagnetic Interference

(With 485 EMI modification option 4). Meets interference requirements of MIL-1-618D: power line conducted, 150 kHz to 25 MHz; radiated, 150 kHz to GHz.

Humidity

Operating and Storage: 5 cycles (120 hours) to 95% relative humidity referenced to MIL-E-16400F (par. 4.5.9 through 4.5.9.5.1, class 4).

Dimensions and Weight

Height: 6 and 9/16 inches.

Width: (with handle) 12 inches.

Depth (including panel cover): 18 and 1/2 inches.

Depth (handle extended): 20 and 5/8 inches.

Net weight (without accessory case and panel cover): 21 pounds.

Net weight (with panel cover, accessory case and accessories): 24 pounds.

Domestic shipping weight: 31 pounds.

Export-packed weight: 42 pounds.

[5] R485 strapped to table, not mounted in rack.

http://manoman.sqhill.com

OPERATING INFORMATION

General

To effectively use the 485, the operation and capabilities of the instrument must be known. This section describes the operation of the controls and connections and gives first-time and general operating information.

PRELIMINARY INFORMATION

Operating Voltage

WARNING

This instrument is designed for operation from a power source with its neutral at or near earth (ground) potential with a separate safety-earth conductor. It is not intended for operation from two phases of a multi-phase system, or across the legs of a single-phase, three-wire system.

The 485 can be operated from either a 115 V or 230 V nominal line voltage source, or a 220 V external battery pack. The Line Voltage Selector switch on the rear panel converts this instrument from one operating voltage to the other.

Power Cord Conductor Identification

Conductor	Color	Alternate Color
Ungrounded (Line)	Brown	Black
Grounded (Neutral)	Blue	White
Grounding (Earthing)	Green-Yellow	Green-Yellow

CAUTION

This instrument may be damaged if operated with the Line Voltage Selector switch set to incorrect positions for the line voltage applied.

115 V	*90-136 V*
230 V	*180-272 V*

The 485 is designed to be used with a three-wire AC power system. If the three to two-wire adapter is used to connect this instrument to a two-wire AC power system, be sure to connect the ground lead of the adapter to earth (ground). Failure to complete the ground system may allow the chassis of this instrument to be elevated above ground potential and pose a shock hazard.

Operating Temperature

The 485 can be operated where the ambient air temperature is between −15°C and +55°C (+5°F and +131°F). This instrument can be stored in ambient temperatures between −55°C and +75°C (−67°F and +167°F). After storage at temperatures beyond the operating limits, allow the chassis temperature to come within the operating limits before power is applied.

The 485 is cooled by air entering through the air filter on the rear panel and exiting through the holes on the sides. Adequate clearance must be provided at these locations. Allow at least one inch clearance behind the air filter and at least one inch on the sides.

A thermal cutout in this instrument provides thermal protection and disconnects the power to the instrument if the internal temperature exceeds a safe operating level. Power is automatically restored when the temperature returns to a safe level. Clean the air filter periodically; a dirty filter prevents adequate air flow into the instrument.

CONTROLS AND CONNECTORS

General

The major controls and connectors for operation of the 485 are located on the front panel of the instrument. Some auxiliary functions are provided on the side, top, bottom and rear panel. To make full use of the capabilities of this instrument, the operator should be familiar with the function and use of each of these controls and connectors. A brief description of each control and connector is given here.

Front Panel

POWER Pushbutton	Turns instrument on or off.
CAL 5 V Connector	BNC connector for square-wave voltage calibrator output signal.
FREQ Pushbutton	Selects one of two frequencies (1 kHz or 1 MHz) for the fast-rise calibrator signal.
INTENSITY Control	Controls intensity of writing beam.
B INTENSITY Control	Provides additional intensity control for the B SWEEP.

http://manoman.sqhill.com

SCALE ILLUM Control — Controls illumination of internal CRT graticule.

BEAM FINDER Pushbutton — Compresses trace within graticule area, regardless of position control settings or amplitude of signal applied.

BW LIMIT Pushbutton — Limits to approximately 20 MHz the bandwidth of the vertical amplifier system and of the INTernal TRIGger signal.

20 MHz Indicator — Lights when bandwidth of vertical amplifier is being limited.

VERT MODE Pushbutton Selector

- CH 1 — Displays Channel 1 only.
- ALT — Dual trace display by switching between channels at the end of A sweep.
- CHOP — Dual trace display by switching between channels every 0.5 μs (1 MHz chopped display).
- ADD — Algebraically adds CH 1 and CH 2 input signals.
- X-Y — Permits X-Y operation. Displays CH 1 signal on the vertical (Y) axis and the CH 2 signal on the horizontal (X) axis, with a 4 MHz phase-compensated bandwidth.
- CH 2 — Displays CH 2 only.

INT TRIG Pushbutton Selector

- NORM — The signal being displayed is the internal trigger source.
- CH 1 — Selects CH 1 as the internal trigger source.
- CH 2 — Selects CH 2 as the internal trigger source.

VOLTS/DIV Switch, CH 1 and CH 2 — Selects 1X calibrated deflection factors from 5 mV/div to 5 V/div in ten steps (1-2-5 sequence). Attenuating probe tip deflection factors for X10 and X100 coded probes are automatically indicated by the three readout lamps at the circumference of this knob. All three lamps are off when the channel is not selected for display by the VERT MODE selector, or when using probe IDENTify.

VARIABLE volts/div Control, CH 1 and CH 2 — Provide continuously variable deflection factors between calibrated steps. Maximum deflection factor range is extended to 12.5 V/div. Push-away control provides calibrated deflection factor in the CAL IN position.

GAIN Adjustment, CH 1 and CH 2 — Screwdriver adjustment allows calibration of vertical deflection factor.

A EXT TRIG Pushbutton (momentary not on 485-1 and 485-2) — Overrides other vertical controls to display the external signal being used for A sweep triggering.

1 MΩ/50 Ω Switch, CH 1 and CH 2 (485-2 has RESET-PUSH) — Illuminated push-push selection for input impedance. Is also used to reset 50 Ω overload condition (1 MΩ/50 Ω switch must be pushed twice to return to 50 Ω input impedance). 485-2 is non-illuminated momentary switch for RESET only.

RESET Indicator — When maximum input power is exceeded in the 50 Ω mode causing the overload disconnect to operate, the RESET indicator is illuminated, and the 1 M Ω/50 Ω lamp is turned off.

Input Selector Switch, CH 1 and CH 2

- AC — Capacitively couples input signal to vertical amplifier.
- GND — Grounds the amplifier input and permits precharging the AC input coupling capacitor. 50 Ω termination disconnected in the 50 Ω mode.
- DC — Signal is directly coupled to the vertical amplifier.

Input CH 1 or Y Connector and CH 2 or X Connector — BNC connectors for applying external signals. Included are concentric coding rings for probes with scale factor and identify switching.

POSITION Controls, CH 1 and CH 2 — Vertically positions the display. In X-Y mode, CH 1 controls positions in the Y (vertical) axis and the CH 2 control positions in the X (horizontal) axis.

http://manoman.sqhill.com

CH 2 POLARITY Switch	+UP and INVERT slide selector provides for inverting CH 2 display.
HORIZ DISPLAY Pushbutton Selector (Blue Panel Background)	(Inoperative in the X-Y, VERT MODE, and when timing knobs are locked in the 1, 2, and 5 ns/div position.)
A	Displays A sweep.
INTEN (A)	Displays A sweep intensified (after the delay time) for the duration of B sweep.
ALT	Alternately provides INTEN (A) and B (DLY'D) displays.
B (DLY'D)	Displays B (DLY'D) sweep.
TRACE SEPARATION Control	Provides additional positioning to B (DLY'D) display in the ALT horizontal display mode.
Triggering Source Switch, A TRIGGERING and B Triggering	(Green Panel Background)
INT	Uses the signal selected by the INT TRIG switch as the triggering signal.
LINE (A TRIGGERING only)	Uses a portion of the line-frequency voltage as a trigger signal.
B RUNS AFTER DELAY TIME (B TRIGGERING Only)	B runs automatically after the time selected by A TIME/DIV and the calibrated DELAY TIME POSITION control.
EXT	Permits triggering on signals applied to the EXT TRIG INPUT connector.
EXT 10	Attenuates external trigger signal by a factor of 10.
Triggering COUPLING Switch, A TRIGGERING and B TRIGGERING	
AC	Trigger signals are AC (capacitively) coupled to the trigger circuitry. Trigger signals below 16 Hz are attenuated.
LF REJ (AC Coupled)	Attenuates triggering signals below 16 kHz.
HF REJ (AC Coupled)	Triggering signals below 16 Hz and above 50 kHz are attenuated.
DC	DC (direct) couples all trigger signals to the trigger circuitry.
EXT TRIG Input Connector	BNC connector providing input for external trigger signals.
SLOPE Switch, A TRIGGERING and B TRIGGERING	Permits triggering the sweep on the positive or negative-going portion of the trigger signal.
LEVEL Control, A TRIGGERING and B TRIGGERING	Selects amplitude point on the triggering signal where sweep-triggering occurs.
TRIG'D Indicator	Lights when A sweep is triggered.
SWEEP MODE Switch, A TRIGGERING	
AUTO TRIG	Permits normal triggering on waveforms with repetition rates of at least 20 Hz. Sweep free-runs in the absence of an adequate triggering signal.
NORM TRIG	Permits normal triggering. No CRT display in the absence of an adequate trigger signal.
SINGLE SWEEP	Displays one sweep only until reset.
RESET	A momentary-contact position of the SWEEP MODE switch that provides for re-arming the A sweep generator during the SINGLE SWEEP mode of operation.
READY Indicator	Is illuminated when A sweep is armed in the SINGLE SWEEP mode.
A TRIGGER HOLDOFF	Adjustable control of the time between sweep steps, permits a stable presentation of repetitive complex waveforms. The control covers at least the time of one full sweep for all but the two slowest sweeps.
DELAY TIME POSITION	Ten-turn calibrated control delays B sweep start (or B trigger arming) from 0 to 9.9 times the Time Base A TIME/DIV setting after the start of A sweep.
A and B TIME/DIV AND DELAY TIME Switch	Selects calibrated A and B sweep rates from 0.5 s/div to 1 ns/div in 27 steps (1-2-5 sequence). Delay Time operation extends from 0.5 s/div to 10 ns/div.

http://manoman.sqhill.com

A VARIABLE Control	Provides continuously variable A sweep rate to approximately 2.5 times the calibrated setting (uncalibrated sweep rate is extended to 1.25 s/div). Push away control provides calibrated rate in the CAL IN position.
DLY'D SWEEP PULL Knob	Provides for advancing the B (DLY'D) sweep rate ahead of the A (DELAYING) sweep rate. (When A rate is 1, 2, or 5 ns/div the concentric knobs are locked together, and only the A sweep is displayed.)
POSITION (horizontal) Control	Horizontally positions trace. Inoperative in X-Y mode.

Rear Panel

TRACE ROTATION Adjustment	Screwdriver adjustment to align trace with horizontal graticule lines.
FOCUS and ASTIG Adjustment	Adjustment used to obtain a well defined display. Requires infrequent readjustment.
B +GATE	BNC Connector providing a positive-going rectangular waveform coincident with B sweep.
A +GATE	BNC connector providing a positive-going rectangular waveform coincident with A sweep.
A SWEEP Connector	BNC connector provides a sample of A sawtooth generator signal.
Z AXIS INPUT Connector	BNC input connector for intensity modulation of the CRT display.
PROBE POWER	Two 4-pin connectors at the rear of the instrument provide power suitable for optional active probes such as the P6201.
LINE CORD	Power cord is a 3-wire, permanently attached cable, approximately 7.5 feet in length.
LINE VOLTAGE SELECTOR	Recessed slide switch selects nominal operating line range. 115 V (90 to 136 V) or 230 V (180 to 272 V).
OPERATING TIME	Elapsed operating time indicator. 5000 hr. scale.

Bottom Side

1 MΩ BAL, CH 1 and CH 2	Adjustment provides for DC balance of 1 MΩ Buffer amplifier.

NOTE

Two types of crt graticules have been used in some Tektronix oscilloscopes. One graticule has 0% and 100% risetime reference points that are separated by 6 vertical graticule divisions. The other graticule has the 0% and 100% risetime reference points separated by 5 vertical divisions. In your manual, illustrations of the crt face or risetime measurement instructions may not correspond with the graticule markings on your oscilloscope.

http://manoman.sqhill.com

CIRCUIT DESCRIPTION

Introduction

This section describes the electrical operation and relationship of the circuits in the Type 485. The theory of operation for circuits that are used only in this instrument are described in detail in this discussion. Circuits that are commonly used in the electronics industry are not described in detail.

50 Ω ATTENUATOR

Two identical attenuators, one for each vertical channel, are used to select the desired vertical sensitivity of the 485. Each attenuator is an integral unit containing various 50 Ω attenuators, input overload protection circuitry and, where applicable, a 1 megohm attenuator and 1 megohm buffer amplifier.

The 50 Ω attenuator is comprised of a delay line, DL410, and four 50 Ω attenuator sections. The ÷ 2 and ÷ 2.5 50 Ω attenuator sections are shared by a 1 MΩ buffer amplifier. The two ÷ 10 attenuator sections are used only in the 50 Ω mode. The delay line equalizes the delay differences between the 1 MΩ buffer amplifier and the 50 Ω mode. R127 provides termination for the 1 MΩ buffer amplifier when the instrument is operating in the 50 Ω mode.

1 MEGOHM BUFFER AMPLIFIER

The 1 megohm buffer amplifier provides a high input impedance and unity gain when terminated in 50 Ω. It is connected to the input through relay K1S1 only in the 1 megohm mode and when the RESET light is on.

C33 and R33 provide input current limiting. CR33 clamps negative transients in excess of 9.6 V to protect FET Q34. The gate to drain junction of Q34 gives clamping for positive-going overloads. The high frequency signal path goes from the input FET to Q40, an emitter follower. R53 sets the high frequency gain. Q60 drives Q62; CR62 balances out the base-emitter voltage of Q62 and temperature compensates it to keep the standing current in Q62 independent of temperature. Q62 current drives the output for positive signal swings. Q60 also drives Q70, which pulls the output negative through R69 and serves as reverse termination at high frequencies. CR64 and CR65 work as expanders for high amplitude signals. R55 and C55 are high frequency adjustments which affect the first five nanoseconds of the transient response. L56 and L71 are integral parts of the circuit board providing high frequency peaking. Q50 is a low impedance drive for the low frequency feedback path.

Low frequency feedback is accomplished by U48, which compares the voltage levels at the base of Q40 and the output, J70. C46 matches the time constant of C77 and R75 with the time constant of R42 and parallel combination of C46 and C47. C48 sets the bandwidth of U48.

50 Ω OVERLOAD PROTECTION

In the 50 Ω mode, K1 is closed by U80, which routes the signal to the 50 Ω attenuator. 50 Ω input protection is provided by an RMS detecting circuit in U80. R84 and R107 attenuate the input signal 100X for U80. C86, C87, and R87 integrate a signal proportional to the RMS value of the signal at pin 3 of U80. When an overload is detected, K1 is de-energized, removing the signal from the 50 Ω attenuator section and applying it to the input of the 1 megohm buffer amplifier. U80 also lights DS96, the RESET light. To reset, S125B is switched to the 1 megohm position, causing the scope to be in the 1 megohm mode. Return to the 50 Ω mode is then accomplished by pushing S125B (50 Ω/1 megohm mode switch) again.

VERTICAL PREAMPLIFIER

CH 2 is identical to CH 1 except that CH 2 has a polarity switch. Only CH 2 will be described here. The CH 2 signal is received from the CH 2 attenuator through J300. Diode bridge CR301, CR302, CR303, and CR304 protects the input from large signals that occur too fast for the input protection relay to react. T305 is a balun, providing a push-pull signal to U310 at high frequencies. The 50 Ω input termination consists of R308, R305, and R309. R308 is adjusted to give 50 Ω DC resistance at input connector J1. CH 2 offset control R306 adjusts the voltage at the input connector J1 to zero in the absence of an input signal. Either R310 or R312 is selected by the POLARITY switch S310, allowing the variable control to be balanced in both invert and normal modes. The output leads of U310 (pins 5, 6, 8, and 9) are crossed over so that the polarity of the signal can be inverted. R90, the variable control, and the resistor network R317, R319, R325, R326, R327, and R328 determine the ratio of currents in pin 11 and pin 12, hence the ratio of currents in transistors connected to pins 6 and 8 to the current in transistors connected to pins 5 and 9. Varying this ratio controls the gain of U310[1]. At all sensitivities other than 5 mV/div, pins 11 and 12 of U350 are shorted together by S95. Thus half the signal current in U350 is lost through R367 and R368. In 5 mV/div, S95 contacts open, causing all of the signal current to flow in the transistors connected to pins 5 and 9, doubling the gain

[1] Gilbert, Barrie, A New Wide-Band Amplifier Technique, IEEE Journal of Solid State Circuits, Vol SC-3 number 4, December, 1968, P353.

http://manoman.sqhill.com

of U350. Other S95 contacts (shown on schematic 4) close to maintain the voltage at outer collectors pins 5 and 9 of U350. R355, R356, and R357 are low frequency (thermal) transient response compensations. The CH 2 gain control R358 is used to allow the CH 2 gain control (front-panel) to be centered in its range.

SIGNAL CHANNEL SWITCH

Signal from U350 is connected to pins 13 and 1 of U430 and exits U430 at pins 16 and 14. The signal then continues on to and is terminated by the trigger channel switch U530, diminished slightly in bandwidth by the energy extracted by U430.

A push-pull position control signal is injected between U430 and U530 through R376 and R386.

If no current flows through Q436, pin 12 is 0.3 V higher than pin 11 and U430 is on. Under this condition, the amplified signal leaves pins 5 and 9 on 100 Ω EC board transmission lines, joins with the signal from channel 1 and enters the A Ext Trigger relay K410 on 50 Ω EC board transmission lines.

Instruments without the A Ext Trigger option contain jumper wires in place of the relay. The A Ext Trigger signal is injected by the relay at this location, which is considered to be the interface between the preamplifier and the main vertical amplifier. A RLC network consisting of C407, L409, R407, etc. provides some boost to compensate for delay line losses at high frequencies.

The signal next passes into the delay line DL410 which delays the vertical signal 75 ns so that the sweep may start before presentation of the triggering signal.

INTERNAL TRIGGER AMPLIFIER

Signals looped through U430 continue to trigger channel switch U530 and are terminated in R528 and R529 which are the collector loads for U350. If no current flows in Q538, voltage divider R534 and R535 holds pin 12 of U530 above pin 11 and the CH 2 trigger signal amplified in U530 appears between pins 5 and 9 of U530. Trigger channel switch U530 is turned off when Q538 conducts 4 mA, pulling pin 12 down to 9.8 V (0.3 V below pin 11). Signal current in this case is shorted out by the connection between pins 6 and 8. In either case, the total current in U530 is unchanged so that the voltage on pins 5 and 9 of U510 remains unchanged at +12 V.

Q544 and Q546 provide small additional gain for the trigger signal. RT551 temperature compensates the gain of stages U310 through Q564. Q552 and Q556 select the bandwidth of the trigger signal.

In the full bandwidth mode Q556 is on and Q552 is off. Filter L559, R559, R557, and C557 provides a constant impedance at all frequencies as the collector load of Q556 and thus full bandwidth. In the 20 MHz mode Q552 is on, Q556 is off, and high frequencies are attenuated by C557. Since the bandwidth filter in the vertical amplifier is a two-pole filter, the 3 dB point of the trigger's single pole filter is slightly less than 20 MHz. The low frequency phase shift of the two filters is identical, however, so that phase match may occur in X-Y operation of the scope.

Signals at the collector of Q556 are buffered by emitter follower Q564 and sent to A and B trigger amplifiers via J568 and J566 respectively. CR562 matches the base emitter junction of Q564, and R560 is adjusted so that the zero signal voltage at Q564's emitter is zero. R562 pulls away the collector current of Q556 or Q552.

Q572 and Q576 buffer the trigger signal, which becomes the X signal in X-Y mode. C572 is part of the filter which matches the delay of the vertical delay line DL410.

Trace Separation

Trace separation circuitry injects a positioning signal at the main vertical interface during the operation of B sweep in the ALTernate sweep mode.

Q440, Q456, Q444, and Q454 provide the push-pull trace separation signal through R440 and R456. R458 and C458 ensure that the output impedance of the trace separation circuitry is 100 Ω at all frequencies.

MAIN VERTICAL AMPLIFIER

The signal received from delay line DL410 is terminated and T coil peaked by the inductance of pins 1, 13, 14, and 16 of U620. The required additional inductance L621 and L625 is achieved in the leads to pins 16 and 14 which are lengths of run on the etched circuit board. This inductance plus C621 and C625, made from 3 layers of etched circuit board, and R621 and R625 form the forward termination of the delay line. The same method of termination and peaking is used in each stage using the 151-0078 integrated circuit.[2] The network attached to pins 2 and 3 of U620, provides delay line and thermal transient response compensation. The gain of the main vertical amplifier is adjusted by R629. Vertical amplifier gain is temperature-compensated by RT644.

[2] **Addis, John "Three Technologies On One Chip Make A Broadband Amplifier", Electronics, June 5, 1972, Pg. 103.**

http://manoman.sqhill.com

The network connected between U650 and U660 is the bandwidth limiter network. The network provides a constant impedance of 50 Ω per side at all frequencies looking from pins 4 and 10 of U660. In the full bandwidth mode, signal from pins 5 and 9 of U650 loops through U660 and is terminated in the bandwidth limit network. In the 20 MHz mode, the signal is obtained from pins 6 and 8 of U650. In passing through the bandwidth limit network signals above 20 MHz are attenuated at 12 dB/octave.

U660 is an FT doubler configuration with the input T coil peaked. Bias for the inner set of bases is set by R672 and R673. The output transistors are high voltage devices which drive the CRT's distributed deflection structure.

In the event of a loss of a CRT termination resistor, the long tail current through R657 pulls pins 2, 8, and 3 of U660 down. When the +27 V supply goes below 25 V, Q686 turns on, turning on Q688 which shorts the 25 V supply. The loss of the +25 V supply will shut down the power supply inverter. See inverter current limiting.

SCALE FACTOR READOUT

Scale factor readout control circuitry is in U80. With a 1X probe or with an non-readout coded connector connected to the input connector code ring surrounding J1, pin 11 of U80 is connected to +5 V through R81. The voltage at pin 11 is sensed by U80 and pin 10 is pulled down, lighting the X1 light emitting diode (LED), CR99. 11 kΩ to ground from the code ring shuts off CR99, and turns on CR98, the X10 LED. A 6.8 kΩ from the code ring to ground will shut off the X10 LED and light CR97, the X100 LED. A short circuit on the code ring provides trace ID which pulls down pin 7 of U80, shifts the trace upward one-fourth of a division, and shuts off the scale factor light. The trace ID signal goes to R289 on CH 1 and R389 on CH 2 to provide trace shift in the vertical pre-amplifiers.

VERTICAL MODE CONTROL

U1535B controls the vertical logic (diagram 3) via two control leads from pins 8 and 9. These leads also are connected via Q1590 and Q1594 to the trigger logic (diagram 4) when the trigger is NORM. The trigger logic is independent of U1535B when CH 1 or CH 2 triggers are called up.

U1535B is controlled by the mode switch in CH 1, CH 2, ADD, or X-Y. In the ALT or CHOP mode, the IC's control the input to pin 7 of U1535B to cause it to either alternate on command from A GATE or to CHOP. When the HORIZ is in ALT, and the vertical in ALT, U1535B changes state only every other A GATE. Note that A GATE is the signal that activates U1535 in ALT and the signal from U1530B pin 6 only allows every other A GATE through. U1535A output is A GATE 2, and U1535B is A GATE 4.

In the CHOP mode, U1585 is on and U1535B changes state every time U1585 makes an output. While U1585 is making an output a signal from U1585 pin 4 blanks to prevent displaying the switching from CH 1 and CH 2 and back.

Z AXIS

U1560 output drives the Z AXIS amplifier. U1560 is controlled by the A and B GATES, the A-B control via pin 15, the INTENsity controls and the EXT Z AXIS.

The circuit consisting of Q1566 and Q1568 disconnects the B INTENSITY control during X-Y or when A=1, 2, or 5 ns.

A TRIGGER AMPLIFIER

The Source Switch SW700 selects one of the four modes which the 485 will trigger on: INT, LINE, EXT, or EXT ÷ 10. Signals above approximately 1 MHz, except in HF REJ are coupled through C705. R705 and R709 form a 1 MΩ input resistance and a loss pad to compensate for the loss across C705, matching high frequency and low frequency gains. R708 protects Q712A input by limiting current when CR711 or Q712A is forward biased. Q712A and Q712B form a source follower with the source voltage very close to zero. The source follower drives Q716, an emitter follower, which drives U730. The balun coil T719 produces a differential signal. U730, U738, and U740 are cascode amplifiers. The slope switch SW720, switches the collectors of U740 to give selection of the triggering slope.

A EXT TRIGGER IDENTIFY

The A EXT TRIG IDENTIFY function is driven by the emitters of U730; this allows U830 to be coupled to the trigger signal and the level control. The center line crossing point of the A EXT TRIG signal corresponds to the trigger point of the sweep for timing information.

When the EXT TRIGGER IDENTIFY switch is pushed, U830 is turned on and its collectors are connected to the vertical delay line via relay K410. VR838 and VR839 provide DC level shift.

The cables between J842 and J843 and relay K10 have a time delay so that the EXT trigger signal will be displayed with the same time position as signals arriving through CH 1 or CH 2 input.

http://manoman.sqhill.com

A TRIGGER GENERATOR

The trigger amplifier drives a Schmitt Trigger circuit based around CR751 and a constant resistance load. This circuit provides a standardized output pulse that is time related to the trigger event. This standardized pulse and a holdoff signal drive a two tunnel diode circuit to provide stable triggering from DC to at least 350 MHz with very low trigger jitter.

CR762 is the arming tunnel diode and CR772 is the output tunnel diode. After CR762 is fully armed and CR772 is partially armed (at the end of holdoff), a pulse from CR751 causes CR762 to go to its high state. This increases the current through R764 to fully arm CR772, which goes to its high state when the same pulse that fired CR762 is received through the short delay line. The output of CR772 drives differential pair Q792 and Q794. When CR772 is in its high state pin 1 of U780 is high, turning on the light DS781 (TRIG'D). Q792 provides the A GATE through emitter follower Q810. The output of Q794 couples to a differential pair Q802 and Q804, which provide the sweep gates.

When the sweep is completed, a positive signal from A sweep turns on Q816 and Q822 to provide a signal to pin 16 if U780. This initiates the holdoff portion of U780 and pin 17 goes positive. Pin 17 stays positive as determined by timing R's and C's on the timing switch to pin 8. The holdoff signal on pin 17 of U780 drives Q768 and Q778. Q768 and Q778 gate the current to CR762 and CR772. When Q768 and Q778 are off, CR762 and CR772 are receiving the appropriate current as set by R765 (A arming T.D.) and R775 (A output T.D.). When Q768 and Q778 are on they reset CR762 and CR772 to their low states.

In AUTO TRIG pin 19 of U780 is grounded. The trigger signals must recur at least every 50 ms, which is the lowest rate the circuit will provide a triggered sweep in AUTO MODE. The timing of the AUTO MODE is determined by the time constant of R787 and C787.

In SINGLE SWEEP mode +5.5 V is applied to pin 12 of U780. There will be only one sweep for each time U780 is armed by pushing the RESET switch. The sweep will fire when a trigger signal is received while or after the RESET switch is depressed. The READY light on pin 11 of U780 indicates when the sweep is armed.

B TRIGGER GENERATOR

Is similar to A Trigger Generator except it has RUNS AFTER DELAY TIME mode that disconnects the trigger amplifier. In addition, it uses A Trigger Gate and delay pickoff gate as hold-off.

In the triggerable mode, the B Trigger Generator triggers only after receiving both the delay pickoff and A Gate signals. Delay pickoff gate drives comparator Q1092 and Q1096. Both A Gate and delay pickoff gate are required to drive Q1082. The output of Q1074 provides arming current for CR1062 and CR1104. When the triggering signal causes CR1052 to go to its high state, CR1062 is properly armed, and will fire arming CR1104, which fires approximately 1.5 ns after CR1062.

In B RUNS AFTER DELAY TIME mode, the trigger amplifier is turned off via R1038 and enough current is flowing in the base of Q1068 so that it is in saturation. This saturation routes enough current to CR1104 to turn it on when A Gate and delay pickoff gate arrive.

In both cases when CR1104 goes to its high state, comparator Q1106 and Q1110 changes state giving a B GATE out thru Q1114. Q1106 is connected to comparator Q1121 and Q1124 which changes state, giving plus and minus sweep gate out.

In A 1, 2, and 5 ns, B is in B RUNS AFTER DELAY TIME. In addition in 1 and 2 ns the voltage to which C1121 charges is varied by the HORIZONTAL POSITION control. This gives a time position to these two sweep speeds when using the HORIZONTAL POSITION control.

A and B SWEEPS

A and B sweep generators each produce, upon receipt of a gate, a negative going sweep of 1.0 V/div of horizontal excursion, starting at +13 V.

In A Sweep, Q884 and Q888 are the miller amplifier. Timing resistors R873 and R1409 to R1422 return to +50 V in calibrated settings. The values of the timing resistors and capacitors C877 to C882, C1404 and C1405, at various sweep speeds may be determined on the Timing Switch and Generator schematics. Q892 compares the sweep output to +13 V and sends the error signal to the miller input via R866 and Q854. Receipt of a + gate at TP851 turns off Q854, allowing the sweep to run. CR867 must not conduct during baseline, so Q866 sinks the higher timing currents. Q934 turns on at the end of the sweep, producing a + going stop pulse that terminates the sweep gate. Q856 and Q858 feed a current to the miller input at the end of the gate to prevent large negative voltages and long recovery times at low timing currents. R863 affects linearity at 10 and 20 ns/div.

The Delay Comparator Q902 enables B Sweep when the sweep voltage becomes less than the voltage on the Delay Time position control, where U910 is a voltage follower.

http://manoman.sqhill.com

Q908 disables B Sweep in A HORIZ DISPLAY mode and Q914 introduces an offset at 10 and 20 ns/div. Switch A9 opens when A Sweep speed is 1, 2, or 5 ns/div to start B Sweep with minimum delay, since the B Sweep Generator produces these speeds regardless of the HORIZ DISPLAY mode.

B Sweep generator is similar to A except that the maximum output rate is 5 times faster. The sequence of timing components is different from A Sweep. Q1238 prevents large positive voltages that would occur at the miller input after the end of the sweep but before the end of the gate.

For A Sweep speed settings of 10 ns/div or slower, A HORIZ DISPLAY mode displays A Sweep. B HORIZ DISPLAY mode displays B, ALT, INTEN, and INTEN (A) function. However, when A Sweep speed is set at 1, 2, or 5 ns/div the Horizontal system displays B Sweep which has been gated on by A trigger. Switch A9 is open so that the Delay Time Position control is effectively set to zero. At A = 5 ns/div, the displayed B Sweep is positioned horizontally in the amplifier. At A = 1 or 2 ns/div, the POSITION control is disconnected from the Horizontal Amplifier via switches B19 and B20. The POSITION control is connected to a variable delay circuit Q1102 which time-positions B Gate for about 30 ns after A Gate.

HORIZONTAL AMPLIFIER

The A sweep or B sweep may be selected by saturating Q1312 or Q1318 respectively. This is done by the horizontal control logic level at N4. If N4 is below –5 V, Q1336 is off and Q1338 saturates. This allows the node R1313, R1314 to go up and turns off Q1318 and saturates Q1312. The output of A sweep generator has been selected. Q1338 being saturated also shunts to ground any signal from B sweep generator that might be present in ALTernate mode. If N4 is –3 V, B sweep is selected as Q1336 saturates, turning off Q1338 and pulling down on R1314, saturating Q1318 and turning Q1312 off. CR1311 will shunt any signal from A sweep.

A +1 V at N4 will turn Q1342 on which turns off Q1358, disconnecting A and B sweeps and saturating Q1356, selecting the X signal for X-Y.

In A = 1, 2, or 5 ns, B18 closes and Q1331 turns on, saturating Q1322, a 2X magnifier. To provide offset to enable viewing at sweep start, in 5 ns B22 closes and offset through R1327 is provided. In 1 and 2 ns, the base of Q1328 is moved and a current from Q1328 through Q1331 and the base collector of Q1332 is inserted to provide offset.

Q1362 and Q1364 compose a HI gain amplifier. The feedback R is R1364 and R1366. The input resistance in B sweep is R1321 and R1322. If A sweep is selected the input resistance is R1307 and R1308.

By selecting B sweep and adjusting R1366, the horizontal gain is set. Then by selecting A sweep and adjusting R1308, A sweep may be calibrated. Both adjustments are done in 0.1 ms/div. To get A and B sweep to start at the same point on screen, R1325 (B REGISTER) provides some offset current for positioning B sweep relative to A sweep. This is done in ALT horizontal mode. Q1378 and R1368 provide a constant current for the operational amplifier Q1362, Q1364. Q1366 is saturated in Beam Finder by S600B. This cuts the feedback resistor value by 2/3 and Rf/RI is reduced. C1364 provides linearity control for 1, 2, and 5 ns/div.

Q1372 and Q1374 are a paraphase amplifier to provide a differential signal to the horizontal amplifier. C1372, C1374, R1372, and R1374 provides thermal compensation for Q1372 and Q1374. Since the horizontal is symmetrical, we will deal with one half only. Q1172 provides isolation between the CRT capacitance and the input amplifier Q1154. Q1172 and Q1174 provide the current path to drive the deflection plate. Q1192 is an emitter follower to provide feedback to Q1154. By using active feedback the actual feedback resistance may be lowered without sacrificing gain. This is accomplished by utilizing the impedance of Q1192, emitter to base, and the divider circuit of R1177 and R1178. CR1156 provides a –5 V reference for Q1154 and CR1152. CR1153 limits the voltage swing to keep either half of the horizontal from saturating. This allows the horizontal to be very linear.

HORIZONTAL CONTROL

This circuit is activated by the HORIZ DISPLAY controls. Several output signals are derived; B disable, horizontal control, A-B control autofocus, trace separation and vertical control drive.

The basic circuit consists of U1535A which is controlled by the HORIZ DISPLAY. The HORIZ DISPLAY switch is overridden when B sweep is used in A = 1, 2, or 5 ns or is X-Y. A truth table is shown on the diagram 12.

The main function of U1535 is to provide a HORIZ CONTROL signal to the horizontal B preamplifier. With the X-Y control of Q1520 (which saturates in X-Y), this signal on pin N4 has 3 levels. In the ALT mode, U1535 switches from one state to another each time the A GATE goes negative. U1530C inverts the A GATE to get the positive edge required by U1535A. (It is important to maintain correct timing with the sweep control since switching must

http://manoman.sqhill.com

occur during holdoff.) Pin 5 of U1535A alternates from HI to LO and the sweep switches from A to B and back again. When B is called up and pin 5 is HI, the Z AXIS IC will be in the B mode via pin 15 signal and the B intensity control will function and Autofocus control is also provided. Also, the trace separation signal will be LO, causing the trace separation control to function. This is via control of U1530B. All inputs must be HI to get LO outputs, and this only occurs in ALT when B is called up. The output of U1530B also drives the vertical logic when the HORIZ DISPLAY is in ALT. B disable is controlled by A, the X-Y signal, and switch SWA2 (which is closed when A = 1, 2, or 5 ns).

POWER INVERTER/REGULATOR

General

The Power Inverter/Regulator circuit provides the operating power for this instrument from a line voltage source or DC voltage source. This circuit also includes the Line Voltage Selector switch to allow for selection of a 115 V or 230 V nominal operating voltage. Fig. 3-1 shows a block diagram of the Power Inverter/Regulator circuit. A schematic is shown on diagram 14 at the rear of this manual.

Line Filter

The purpose of the Line Filter is to prevent the instrument from injecting power supply frequency interference into the power line, or power-line interference from entering the instrument. L1812 and L1813 provide both common-mode and differential filtering. R1812 and R1813 are damping resistors. C1812 and C1813 are common-mode filters and C1814 is a differential filter. R1811 discharges C1814 when the power switch is off.

Line Input Circuit

Thermal cutout S1802 provides thermal protection for this instrument. If the temperature exceeds a safe operating level, S1802 opens to interrupt the applied power. When the temperature returns to a safe operating level, S1802 automatically closes to re-apply the power.

CR1821 contains the main power rectifiers for the Line Input circuit. C1822 and C1823 are the line-storage capacitors. With S1803 in the 115 V position, the circuit acts as a full-wave voltage doubler so that the voltage across the series combination of C1822 and C1823 will be the peak-to-peak value of the line voltage. In the 230 V position, CR1821 acts as a full-wave bridge rectifier. Therefore the voltage developed across C1822 and C1823 will be approximately the same for either 115 V or 230 V operation.

RT1821 and RT1822 are thermistors which limit the charging currents during turn on. When the POWER switch is turned off, the Line Stop circuit stops the Inverter and C1822 and C1823 discharge thru R1822 and R1823.

WARNING

Because the discharge is slow, dangerous potentials will exist across capacitors C1822, C1823, and other connected components for several minutes after the POWER switch is turned off. The presence of voltage in the circuit is indicated by relaxation oscillator R1824, C1824, and DS1824. Neon bulb DS1824 blinks until the potential drops to approximately 100 V.

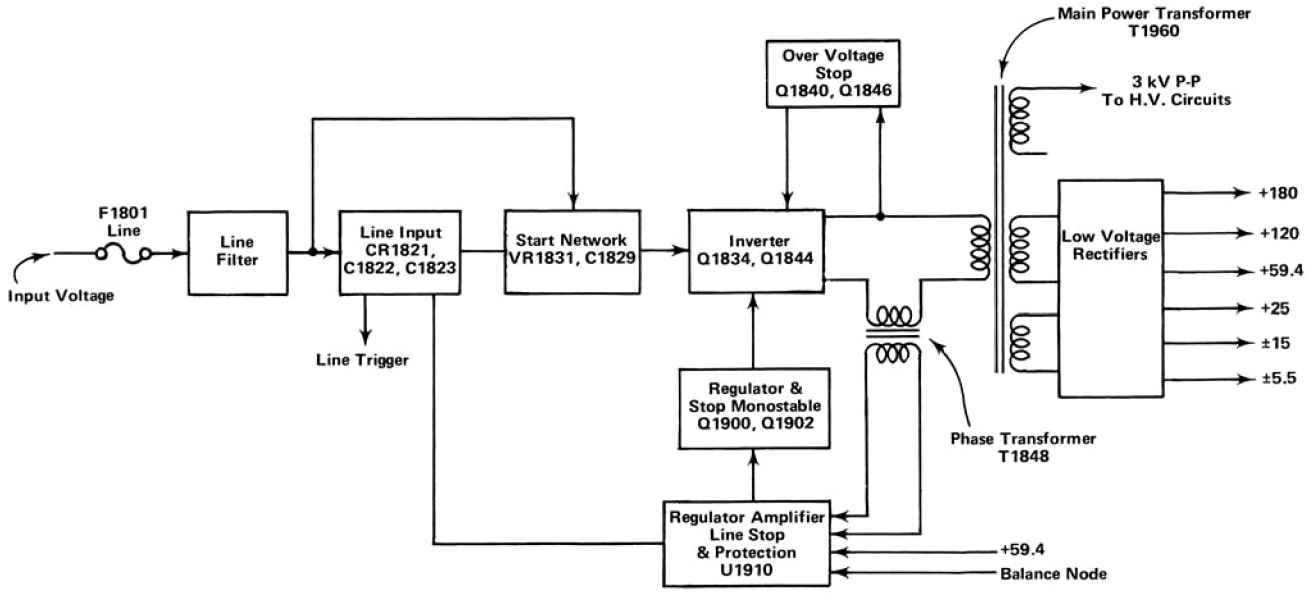

Fig. 3-1. Block diagram of power inverter/regulator circuit.

http://manoman.sqhill.com

DS1801 and DS1802 are line voltage transient protectors. With S1803 in the 115 V position, only DS1801 is connected across the line. If a peak voltage surge in excess of approximately 230 V is present on the line, DS1801 will break down and conduct sufficient current to open the line fuse F1801. In the 230 V position, DS1801 and DS1802 are in series across the line to protect against voltage surges exceeding 460 V.

Transformer T1801 provides a sample of the line voltage for triggering at line frequencies. It also provides a signal to the Line Stop circuit to indicate the presence of line voltage at the input to this circuit. T1825, C1825, and C1827 provide common-mode filtering. C1826 and L1825 act as a differential filter.

Start Network

Resistive divider R1828 and R1829 is connected between the input line and the negative side of C1823. When the line voltage goes positive, C1829 charges. At the same time CR1842 conducts, charging C1835, and CR1843 conducts to charge C1848. When the voltage on C1829 reaches approximately 32 V, VR1831 conducts, discharging C1829 thru the base of Q1844. As Q1844 turns on, C1835 discharges thru L1835 to start the Inverter. After operation has begun, CR1842 discharges C1829 with each cycle of the Inverter. This disables the start network.

Inverter

Refer to the simplified schematic shown in Fig. 3-2. Once the Inverter has been started by the Start Network, the Inverter is self-oscillating. Feedback necessary for oscillation is provided by base-drive transformer T1831. The series-resonant circuit, consisting of L1835 and C1835, has a nominal resonant frequency of about 25 kilohertz. To provide regulation of the voltages induced in the secondary circuit, the action of regulator transistor Q1900 varies the frequency of oscillation on the low side of resonance by holding both Q1834 and Q1844 off for a time during each half cycle as determined by the Regulator circuit (see Inverter Regulator for a more detailed discussion of regulation).

Transistors Q1834 and Q1844 are a switching pair, where only one transistor can conduct at a time. The direction of current flow in the feedback winding of T1831 determines which transistor will conduct. Transistors Q1834 and Q1844 change states every half cycle. The switching action provides a square-wave voltage at the emitter of Q1834, which has a peak-to-peak voltage about equal to the DC voltage from the Line Input circuit. This square-wave voltage supplies the drive necessary to maintain oscillation in the resonant circuit. When both Q1834 and Q1844 are being held off by Q1900, resonant circuit current flows through CR1834 or CR1844. The resonant circuit current drives the primary of the power transformer T1960 and thus supplies power to the Secondary circuit.

In normal operation, the sequence of events during one cycle of operation is as follows:

1. Assume the current in the resonant circuit is at 0 ampere and beginning to increase in the direction to cause conduction in CR1834. At the time the current reaches 0 ampere, regulator transistor Q1900 is turned on by the Inverter Control circuit. The Regulator transistor holds both Q1834 and Q1844 off for a controlled amount of time. During this time, resonant circuit current flows through CR1834.

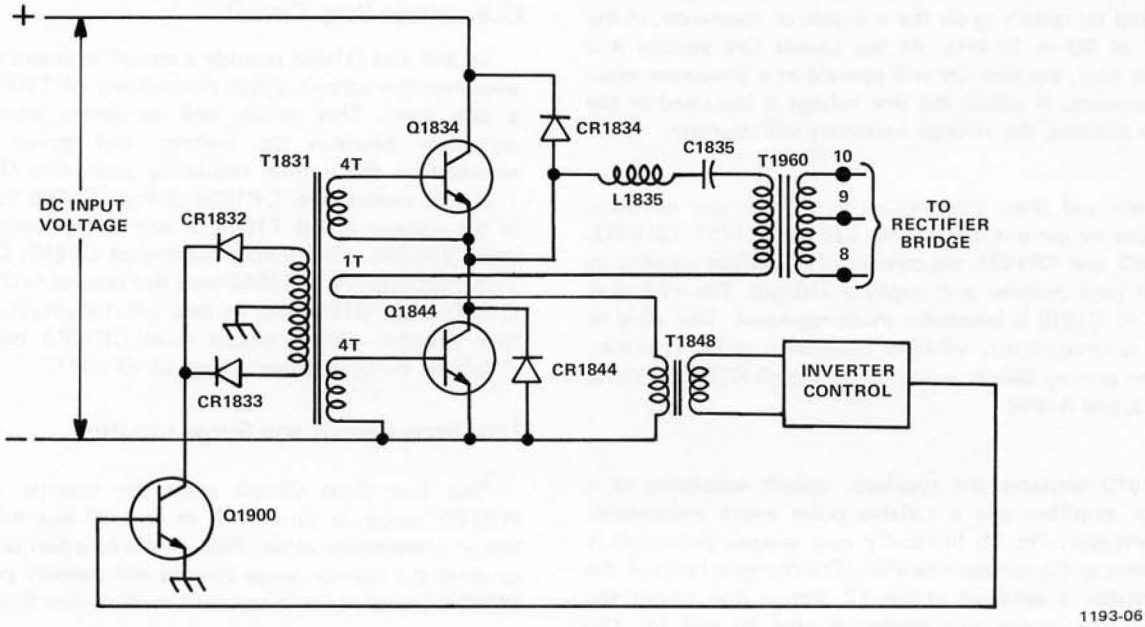

Fig. 3-2. Simplified schematic of inverter.

http://manoman.sqhill.com

2. At a controlled time after the resonant circuit current passes through 0 ampere, regulator transistor Q1900 is turned off by the Inverter Control circuit. When Q1900 is turned off, the direction of current flow in the feedback winding T1831 is such that it induces a voltage in the base windings of T1831, which turns on Q1844 and holds off Q1834. Transistor Q1844 conducts while the resonant circuit current builds up to a maximum and falls off toward 0 ampere.

3. When the resonant circuit current reaches 0 ampere and begins to increase in the opposite direction, regulator transistor Q1900 is again turned on by the Inverter Control circuit. This holds both Q1834 and Q1844 off for a controlled amount of time. While Q1900 is on, resonant circuit current flows through CR1844.

4. When Q1900 is turned off by the Inverter Control circuit, the direction of current flow in the feedback winding of T1831 is such that the induced voltage in the base windings of T1831 turns on Q1834 and holds off Q1844. Transistor Q1834 conducts as the resonant circuit current increases to maximum and falls off toward 0 ampere.

5. When the resonant circuit current reaches 0 ampere and begins to increase in the opposite direction the cycle begins to repeat.

Inverter Regulator

The Inverter Regulator circuit schematic is located in diagram 14 at the rear of this manual. The purpose of the Inverter Regulator is to maintain constant voltages at the semi-regulated supply outputs. This is accomplished by varying the inverter frequency. The nominal resonant frequency of L1835 and C1835 is 28 kHz. Regulation is achieved by operating on the low side of resonance, in the range of 20 to 28 kHz. At the lowest line voltage and highest load, the Inverter will operate at a frequency close to resonance. If either the line voltage is increased or the load is reduced, the inverter frequency will decrease.

Power and phase information to the regulator circuit is provided by current transformer T1848. CR1931, CR1932, CR1933, and CR1934, are connected as a bridge rectifier to deliver both positive and negative voltages. The +7.5 V at pin 6 of U1910 is internally shunt regulated. The −2 V at pin 7 is unregulated. VR1945 provides a stable reference for the sensing divider string consisting of R1940, R1941, R1942, and R1944.

U1910 contains the regulator circuit consisting of a voltage amplifier and a variable pulse width monostable multivibrator. Pin 15 (normally near ground potential) is the input to the voltage amplifier. The charging ramp of the monostable is available at pin 12. Inputs that trigger the start of the monostable appear at pins 10 and 11. The output at pin 9 drives the regulator transistor Q1900. Circuit operation is as follows: In the stable state of the multivibrator, pin 9 will be near ground, holding Q1900 off. As the inverter current goes thru zero, either pin 10 or pin 11 will go positive depending on polarity. This positive pulse sets the multivibrator into its unstable state. During the unstable state, pin 9 will be positive holding Q1900 on. The duration of the unstable state is determined by the voltage sensed at pin 15. If the voltage is low, the duration will be short. As the voltage increases, the duration becomes longer.

The monostable pulse width controls the inverter frequency by the fact that when Q1900 is on, both Q1834 and Q1844 are off. Power delivered to T1960 varies with inverter frequency because the impedance of the series resonant circuit L1835 and C1835 varies with frequency.

Inverter Current Limiting Circuit

U1910 also contains the Inverter Current Limiting circuit. Circuit operation is similar to voltage regulation except that the pulse width of the multivibrator is varied so that the inverter current never exceeds a safe level. The current limit circuit takes over control of the multivibrator during the turn on surge or whenever an overload on a semi-regulated supply causes the inverter current to reach the limit value. R1926 is the current sensing resistor. Voltage at TP1926 will be the negative rectified inverter current to a scale of approximately 0.7 V/ampere. The current sense input at pin 13 will normally be held positive by R1922. During current limit, the negative voltage at TP1926 pulls pin 13 toward ground. Multivibrator pulse width then increases until the current limits at a value which holds pin 13 near ground. If the circuit remains in current limit for more than approximately 30 ms, pin 8 will go positive, tripping the stop monostable, which stops the Inverter. (See protection circuit description.)

Overvoltage Stop Circuit

Q1840 and Q1846 provide a circuit to stop the Inverter whenever the voltage across the primary of T1960 exceeds a safe level. This circuit will be active whenever the connector between the Inverter and power board is removed or the normal regulating path thru Q1900 and T1831 is inoperative. CR1848 charges C1848 to the peak of the voltages across T1960. If this voltage exceeds a safe level, VR1846 will conduct turning on Q1846. C1848 will then discharge thru R1846 into the base of Q1840. When Q1840 is on, Q1844 will be held off stopping the Inverter. The Inverter cannot restart until CR1843 has charged C1848 to the breakdown voltage of VR1831.

Line Stop Circuit and Surge Limiting

The Line Stop Circuit stops the Inverter when the POWER switch is turned off or the AC line voltage falls below a minimum value. This circuit function is necessary to limit the turn-on surge current and thereby protect the POWER switch, Line Fuse, and Line Rectifier Bridge.

When the instrument is first turned on, thermistors RT1821 and RT1822 have a value of approximately

http://manoman.sqhill.com

5 ohms. Line current charging C1822 and C1823 is limited by the thermistors. As the instrument continues to operate, the thermistors heat and drop in resistance. When the instrument is turned off, the Line Stop circuit stops the Inverter, leaving C1822 and C1823 charged. The line storage capacitors now discharge through R1822 and R1823 at a rate approximately equal to the thermal recovery of the thermistors. This rate ensures enough thermistor resistance to limit surge current whenever the instrument is turned back on.

A simplified schematic of the Line Stop circuit is shown in Fig. 3-3. Line Trigger transformer T1801 generates a ground referenced Line Frequency signal of approximately 1 V peak-to-peak. This signal is biased to +0.4 V by R1916 and R1917. Under normal operation, C1918 charges toward +7.5 V through R1918 until a positive going signal from T1801 turns Q1 on discharging C1918. This repeats each line cycle. When the POWER switch is turned off, Q1 stays off allowing C1918 to charge. When the voltage at pin 3 of U1910 reaches approximately +0.7 V the inverter control circuit inside U1910 allows pin 8 to go positive, triggering the stop monostable, which stops the Inverter. For trouble-shooting at low line voltage, the line stop circuit may be disabled by grounding the Line Stop test point TP1918. (L.S.).

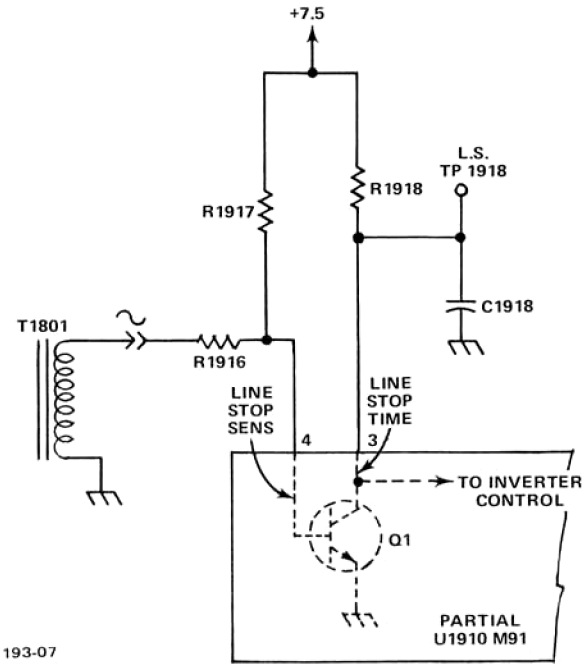

Fig. 3-3. Line stop circuit.

Procedure for Converting the 485 to DC Operation

Read the circuit description entitled Line Stop Circuit and Surge Limiting before proceeding.

1. Set the LINE VOLTAGE SELECTOR switch (rear panel) to 230 V.

2. Check that the DC source voltage range is within 220 V to 350 V DC limits.

3. For DC operation the Line Stop Circuit must be disabled while the instrument is running. Two methods are possible, depending upon the current available from the DC source. The object is to prevent high surge currents, which can occur during hot turn on when the thermistors are low in value and the line storage capacitors are discharged.

a. If the instantaneous current available from the DC source is limited to 30 A or less, connect a jumper from the Line Stop test point (TP1918) to ground. Circuit board holes for this purpose are provided in the rear corner of the power board. This jumper must be removed whenever the instrument is operated on AC.

b. If the DC source is not current limited, an auxiliary switch must be provided to stop the 485 Inverter BEFORE the power is turned off. Stopping the Inverter will prevent rapid discharge of the line storage capacitors. A schematic showing the auxiliary switch is shown in Fig. 3-4A. When operating with the auxiliary switch, always move the switch to the off position BEFORE turning off the power. When turning the instrument on, move the auxiliary switch to the on position BEFORE turning the power on.

4. Check polarity of the power source. The line side (black) must be connected to the positive. The neutral side (white) must be connected to the negative. The safety ground must be connected to earth potential. Proper polarity at the 485 plug is shown in Fig. 3-4B.

LOW VOLTAGE SUPPLIES

± 15 V Supply

The plus and minus 15 V supplies are generated by the same winding on T1960. The center tap (pin 9) is connected to ground. The voltage at pins 8 and 10 is a square wave, swinging positive and negative with a peak value of 15.7 V and a risetime of approximately 2 μs. Each supply is rectified full wave and filtered with a pi section filter.

±5.5 V Supply

The plus and minus 5.5 V supplies are identical to the 15 V supplies except the transformer voltage is 6.2 V peak.

http://manoman.sqhill.com

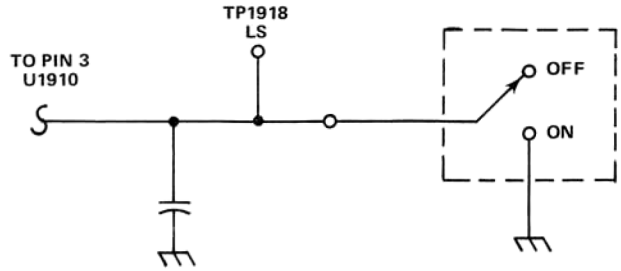

(A)

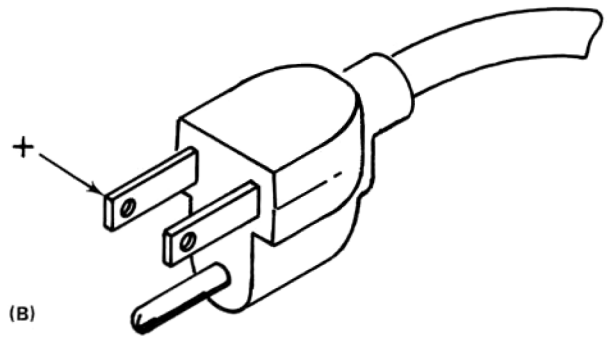

(B)

Fig. 3-4. (A) Schematic showing auxiliary switch for disabling line stop circuit, (B) power plug polarity for DC operation.

+59.4 V and +120 V Supplies

The 59.4 and 120 V supplies are similar to the 15 V supplies except for the output connection, which ties the negative rectified voltage to ground. This elevates the transformer center tap to the peak AC voltage on one side of the winding, which is 59.4 V. The 120 V supply is generated by the full rectified voltage on the transformer.

+180 V Supply

The 180 V supply is formed by a voltage doubler which rectifies the 59.4 V peak AC swing and adds it on the 120 V supply.

+25 V Supply

The 25 V supply is formed by a voltage doubler, which rectifies the 12.4 V AC peak-to-peak swing on the 5.5 V winding and adds it on to the 15 V supply.

+50 V Supply

The 50 V supply is regulated from 59.4 V by Q2046. A temperature-compensated reference is provided by VR2042. The reference voltage is compared to a sample of the 50 V output at U2042 which acts as an inverting amplifier. If the +50 V goes negative, the output of U2042 goes positive. CR2042 is short circuit protection for U2042.

+9 V Supply

The 9 V supply is re-regulated from the +15 V supply by Q2056. A 9 V reference is provided by a divider from the +50 V supply. U2052 is an inverting amplifier which drives Q2056 directly.

+5 V Supply

The +5 V supply is essentially identical to the +9 V supply except for the value of the output voltage.

–9 V and –5 V Supplies

The –9 V and –5 V supplies are essentially identical to +9 V and +5 V supplies except that the driving amplifiers are ground referenced.

POWER SUPPLY PROTECTION CIRCUIT

The power supply protection circuit provides fault protection for the inverter, low voltage, and high voltage power circuits. Fig. 3-5 shows a simplified block diagram of the protection circuit. A schematic of this circuit is shown on diagram 14 at the rear of this manual.

Power supply protection is accomplished by operating the Inverter in a pulse mode. When a fault is present, the Inverter will come on for a short period of time, then shut off for a longer period of time. The cycle repeats until the fault is removed. Approximate timing of the duty cycle is shown in Fig. 3-6.

Stop Monostable

Q1900 and Q1902 form a monostable multivibrator which acts to stop the Inverter when a fault is detected by U1910. During the start period T1831 supplies current to charge C1901 and C1904 thru CR1901 and CR1904. At the same time T1848 supplies power to U1910. As U1910 becomes active, pin 8 acts as a current sink, holding Q1902 off. Pin 8 of U1910 will remain at ground during the start period and sampling period. If a fault exists at the end of the sampling period, pin 8 of U1910 stops conducting, allowing Q1901 and Q1902 to turn on. When these transistors turn on, the voltage on all secondaries of T1831 will go to zero, stopping the Inverter. Once triggered on, the stop monostable will stay on while C1901 discharges through R1902 into the base of Q1902. If U1910 is removed from its socket or is otherwise nonfunctional, the stop monostable will stop the Inverter after the first few cycles of operation. In this mode, the duty cycle will be much shorter because C1901 will not have sufficient time to charge.

http://manoman.sqhill.com

Balance Node

The Balance Node provides short circuit protection for all semi-regulated and regulated DC voltages. It also provides over current protection for the H.V. winding of T1960 and beam current protection for the CRT. Pin 2 of U1910 is the input to the voltage balance amplifier. If the voltage at pin 2 of U1910 is more positive than +200 mV or

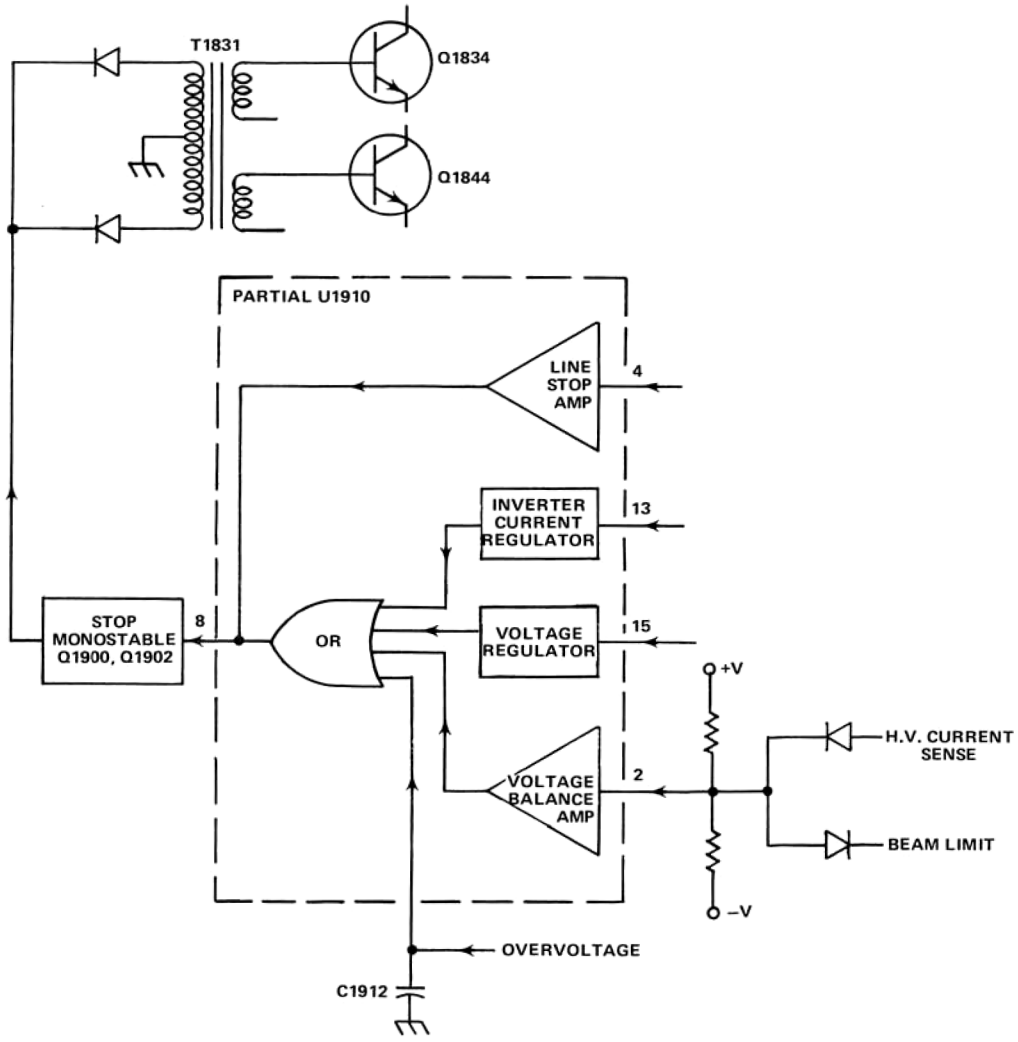

Fig. 3-5. Simplified block diagram of power supply protection circuit.

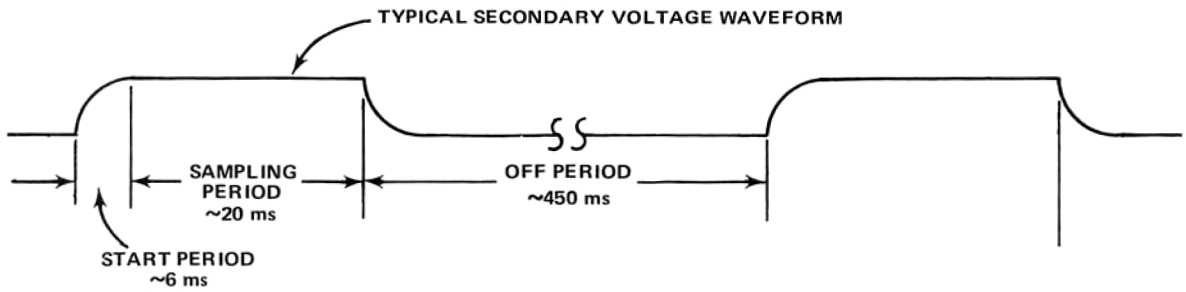

Fig. 3-6. Protection circuit duty cycle.

http://manoman.sqhill.com

more negative than −200 mV, the output will generate an error to stop the Inverter. Under normal operating conditions, current from positive supplies to the Balance Node will equal current to the negative supplies, allowing pin 2 to operate near ground, typically within 50 mV. If any supply is shorted the currents will be unbalanced, causing the voltage at pin 2 to shift into the error region. Shorting a positive supply moves the Balance Node negative, and vice versa.

TP1958 (HV) is the high voltage current sense point. Normally the signal at TP1958 does not have sufficient amplitude to cause conduction in CR1958 and therefore has no effect on the Balance Node. If excessive current is drawn from the cathode multiplier or the H.V. winding in T1960, the amplitude at TP1958 will increase causing CR1958 to conduct, producing an error which stops the Inverter. The DC level at TP1953 (LIM) will normally be at +15 V when the intensity controls are off. As the intensity is increased, CRT beam current will increase, causing TP1959 to move toward ground. If TP1959 goes more negative than −.7 V, CR1959 will conduct, causing an error at the Balance Node, which stops the Inverter. This will only occur when the normal beam limit circuit is inoperative.

Overcurrent Protection

Pin 13 of U1910 is the input to the Inverter Current Regulator circuit. If a semi-regulated supply is shorted, the regulator circuit allows the inverter current to increase to the limit value and remain there throughout the sampling period. At the end of the sampling period, pin 8 of U1910 will go positive, stopping the Inverter.

Low Line Voltage Protection

If the line voltage drops significantly below the minimum specified value, the Inverter will not maintain the correct voltages at the semi-regulated supply outputs. When this occurs, an error will be generated by the voltage regulator, which will cause pin 8 of U1910 to go positive, stopping the Inverter. The Line Stop Circuit will also stop the Inverter if the line voltage is low (see Line Stop Circuit Description).

Sampling Period Timer and Overvoltage Protection

When an error is present at the input to the OR circuit, (see Fig. 3-5) a current is generated which charges C1912 thru pin 1 of U1910. The time it takes pin 1 to reach +0.7 V determines the sampling period. When pin 1 reaches +0.7 V, pin 8 of U1910 will go positive, stopping the Inverter. Over-voltage on the +120 V supply will cause VR1912 to conduct, charging C1912 which stops the Inverter.

CRT CIRCUIT

General

The CRT Circuit produces the high voltage potentials and provides the control circuits necessary for the operation of the cathode-ray tube (CRT). This circuit also includes the Z-Axis amplifier and the Auto-Focus amplifier. Fig. 3-7 shows a detailed block diagram of the CRT circuit. A schematic of this circuit is shown on diagram 13 in the rear of this manual.

Filament Voltage

Filament voltage for the CRT heaters is provided by a separate winding on T1960. The filament voltage is elevated to cathode potential through R1687 and decoupled by C1687. Short circuit protection is provided by DS1687.

High Voltage Supplies

A semi-regulated voltage for operation of the high voltage supplies is provided by the high voltage winding of T1960. One end of T1960 is connected to ground through the high voltage current sensing resistor R2094. A 3 kV peak-to-peak square wave is generated and provides the power necessary to operate the Anode Supply, Cathode Supply, and DC Restorer Circuits.

Anode Supply. The Anode Supply consists of 6X multiplier assembly U1600.

Cathode Supply. The −3000 V CRT cathode voltage (marked −2950 in some instruments) is generated by a 2X multiplier consisting of CR1601, CR1602, C1601, and C1603. R1611 and C1611 provide high frequency filtering. R1612 and C1612 provide high frequency filtering and an AC coupling path for the cathode regulator.

Cathode Regulator. The cathode regulator maintains the cathode at −3000 V and reduces AC ripple. U1624 is a non-inverting preamplifier and Q1614 and Q1618 form an inverting output amplifier. A DC change at U1624 input sensed by R1642B and R1642C (thick film resistors) starts the regulator action. If the voltage at U1624 input goes positive, the output at TP1614 goes negative. This causes the voltage on C1601 to increase during the positive voltage cycle of T1960. Note that the voltage on C1601 is the difference between the positive voltage on T1960 and the voltage at TP1614.

During the negative half of T1960 voltage cycle, the increased voltage on C1601 increases the voltage at the output of the cathode multiplier, thus correcting the original error. R1633 and C1633 provide a low impedance

http://manoman.sqhill.com

coupling path for AC changes to the input of U1624. The output correction is AC coupled through C1612 directly to the cathode. CR1618, CR1621, CR1626, and CR1627 provide short-circuit protection.

Grid DC Restorer. The purpose of the DC restorer circuit is to elevate the output of the Z-Axis amplifier to a potential more negative than the cathode, thereby allowing the grid to control the beam current of the CRT. The circuits are short-circuit protected by R1685, DS1684, and DS1685; R1668, DS1668, and DS1669.

The DC Restorer is current driven from the square wave at the high voltage winding through R1603, R1604, R1605, and R1606. When T1960 goes positive, CR1660 conducts at the grid bias voltage potential. This clamping action establishes the positive swing of the DC Restorer drive. On the negative swing of T1960, CR1663 conducts at the voltage established by the Z-Axis output. This clamping action establishes the negative swing of the DC Restorer drive. The AC swing of the DC Restorer drive is coupled from the low voltage section to the high voltage section by C1663. On the positive swing of the DC Restorer drive, the high voltage end of C1663 is clamped to the cathode voltage by CR1666. During the negative swing of the DC Restorer drive, CR1664 charges C1664 to a voltage more negative than the cathode by an amount equal to the difference between the grid bias setting and the voltage at the output of the Z-Axis amplifier. Fast AC-coupling between the Z-Axis and the CRT grid is provided by C1684. A slower AC path is by way of R1684 and C1664.

Focus DC Restorer. The operation of the Focus DC Restorer circuit is similar to the operation of the Grid DC Restorer. The AC swing of the DC Restorer drive is coupled from the low voltage circuit to the high voltage circuit by C1651. The positive swing will be established when CR1656 clamps at the Focus DC Restorer level voltage. This voltage is approximately 173 V. The negative swing is established when CR1652 clamps at the output voltage of the Auto-Focus amplifier. During the positive swing of the Focus DC Restorer drive, the high voltage end of C1651 is clamped to the focus pot voltage by CR1646. During the negative swing of the Focus DC Restorer drive, CR1651 charges C1652 and thereby establishes the proper level at

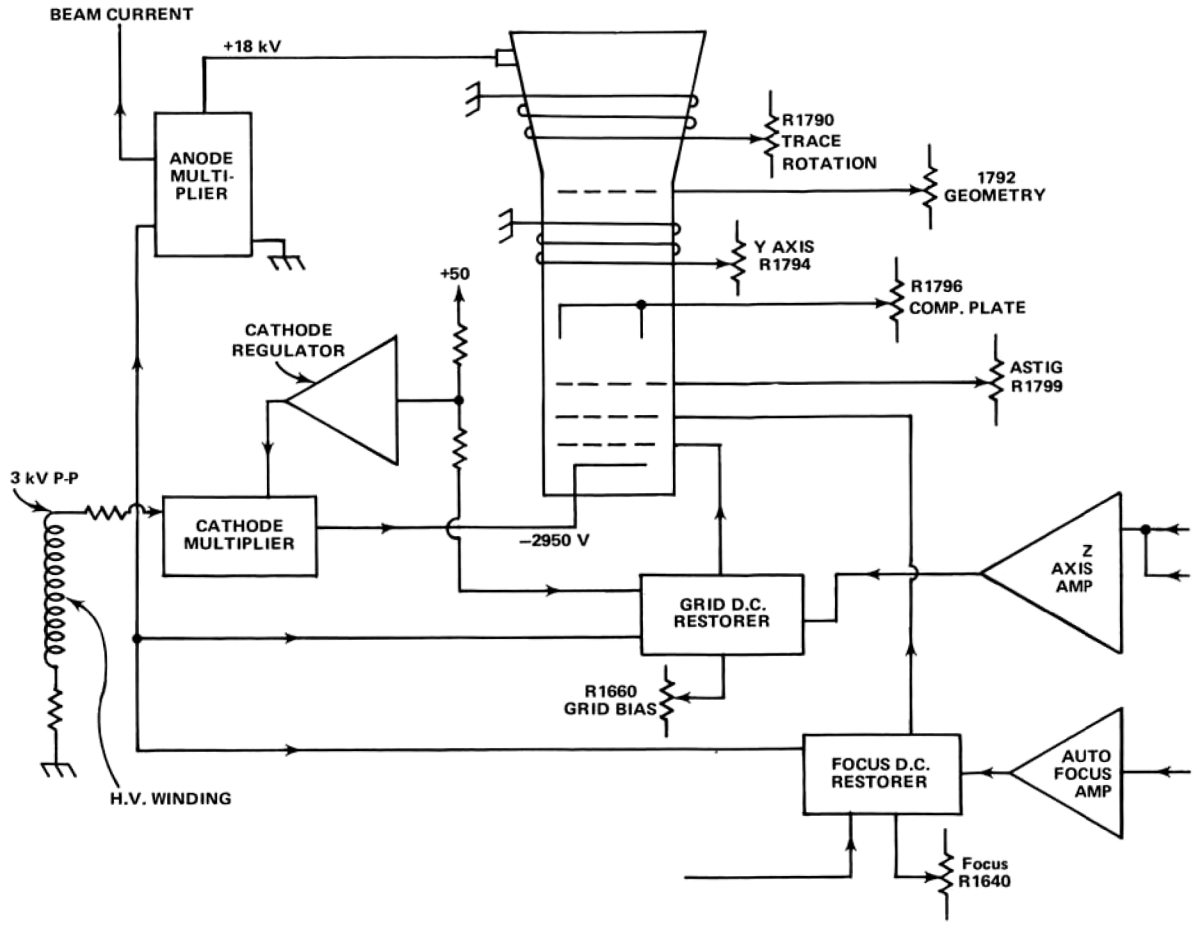

Fig. 3-7. CRT circuit block diagram.

http://manoman.sqhill.com

the focus electrode. The focus pot R1640 is set for optimum focus at low intensity level.

Beam Current Limit

The amplifier consisting of Q1544, Q1546, and Q1548 controls the voltage to the INTENSITY and B INTENSITY controls.

For sweep speeds of 50 ms/div and slower and X-Y, the current in resistor R1536, about 5 μA, pulls the base of Q1544 up to about +6 V. All three transistors are saturated. The average beam current of the CRT post-accelerator is available at the low-voltage end of the high voltage multiplier and is also connected to the base of Q1544. When the beam current is zero, the 5 μA current of R1536 flows into the base of the saturated Q1544. When due to high intensity, the average beam current exceeds the 5 μA value, the voltage at Q1544 base decreases at a rate determined by the net discharge current delivered to C1537. As this voltage goes negative, the transistors Q1544, Q1546, and Q1548 come out of saturation, and into the control range, when the input base voltage has dropped to +4 V. In the linear range the three-stage amplifier gain is about −5 V. Input voltages of +4 V and +1 V result in output voltages of −15 V and 0 V respectively.

The positive going voltage at the intensity controls (Q1548C) gives reduced Z-Axis drive and less beam current. In the linear range of the amplifier the output voltage stabilizes at a voltage resulting in the 5 μA average beam current.

The beam current limit becomes 20 μA if the additional 15 μA current of R1534 is not pulled away by closed A1 contact on S1420 (sweep 50 ms/div and slower) or by X-Y switch closure. Diodes CR1532, CR1534, and CR1535 are involved in this switching.

The time response to an overcurrent is in two parts: A delay for the input to charge to a voltage where the output transistor comes out of saturation, followed by a linear response time constant. Initial delay is 10 ms for maximum beam current and increases for smaller over-currents. The linear response time constant is 10 ms.

Power Supply Shutdown Caused by Excessive Beam Current

If, due to some failure, the control loop is unable to keep the average beam current within either the 5 μA or 20 μA limit, the voltage at the amplifier input discharges below the +1 V level. As the voltage reaches about +0.5 V the Q1546 collector voltage is approximately −0.9 V, and operates the power supply shutdown by connection through diode CR1959.

To prevent shutdown being signaled during the first 200 ms of instrument turn-on, C1538 (thru R1538) provides a delay to compensate for charging currents in the CRT post-accelerator supply. Diode CR1533 biases the 15 μA network so that this current is connected to the Q1544 base before it can drop to the +0.5 V shutdown voltage level. Thus, the higher beam current, (approximately 28 μA) is always required to trip shutdown.

In troubleshooting the instrument it may become necessary to disable the beam limit or beam shutdown loops. This can be done by grounding TP1544 at the collector of Q1544.

CRT CONTROL CIRCUITS

The ASTIG adjustment R1799, which is used in conjunction with the FOCUS adjustment R1640 to obtain a well defined display, varies the positive level on the astigmatism grid. Geometry adjustment R1792 varies the positive potential on the mesh to control the overall geometry of the display.

Two adjustments control the trace alignment by varying the magnetic field around the CRT. Y Axis Align adjustment R1794 controls the current through L1794, which affects the CRT beam after vertical deflection, but before horizontal deflection. Therefore, it affects only the vertical (Y) components of the display. TRACE ROTATION adjustment R1790 controls current through L1790 and affects both the vertical and horizontal rotation of the beam.

R1796 adjust the voltage on the compensation plates to the average vertical deflection plate structure potential. If this adjustment is not precise, proper focusing can not be achieved by the focus control.

AUTO-FOCUS CIRCUIT

The Auto-Focus circuit provides an output voltage that keeps the display focused for all settings of INTENSITY control. To do this, it amplifies the intensity control voltages in a non-linear fashion and gates the B INTENSITY function.

U1710 provides gating, limiting and part of the shaping of the auto-focus. Gating is of the B INTENSITY current pin 1, by the A-B control function pin 15. In ALTernate sweep operation the A-B control switches from −0.1 V to +0.9 V at the end of A sweep (A display), steering the B INTENSITY current to the output, pin 8. The sweep holdoff time, a minimum of 300 ns, is used for the amplifier that follows to settle to the new focus voltage for

http://manoman.sqhill.com

the subsequent A sweep (B display). The first segment of non-linear shaping is done in U1710 by the biasing, which gives no output for an INTENSITY control setting between ground and −3.8 V. No change in Focus voltage is required over this low-intensity range.

The MAX Focus adjustment is used to set the limiting in this stage to coincide with maximum Z limiting. The resistor, pot, and diode network between pin 8 of U1710 and the base of Q1716 serve to provide the last two segment of non-linear shaping and focus gain setting. At the low-intensity condition, the base of Q1716 is at +10 V and CR1710 is conducting. At higher intensity, as current passes into pin 8 of U1710, the voltage drops and CR1710 disconnects as the voltage reaches +8.5 V. When the maximum (limit value) current into pin 8 is reached, this voltage is typically +5 V. The Focus Gain adjustment provides for optimizing the high intensity focus.

The Auto-Focus amplifier provides a stablized voltage gain of about +35 from the Focus Gain control to the output at Q1728 collector. At maximum intensity level, this output voltage can be adjusted from about zero to +70 V and is typically in the +20 V to +50 V range, after proper Focus Gain adjustment.

The network at the base of Q1736 causes its conduction to be proportional to the amplitude and frequency of the Auto-Focus output voltage. This arrangement permits the power transistors Q1728 and Q1732 to operate at a minimum power level consistent with the displacement current output required.

A DC-Restorer network provides for coupling the output of the Auto-Focus amplifier to the focus electrode of the CRT. This consists of four diodes, six capacitors and four resistors including C1651 and C1681. The low-intensity focus is controlled by the high voltage focus pot, which is located for operator adjustment at the rear of the instrument.

CALIBRATOR

Q2106, Q2112, and associated circuitry compose an emitter coupled multivibrator. The frequency of operation, 1 kHz or 1 MHz, is selectable from the front panel by switch S2105. R2109 and R2112 are the current sources for the emitter coupled multivibrator. Accurate 50% duty cycle is obtained by close match of these resistors. R2106 and R2111 are used to protect Q2106 and Q2112 from damage if they are plugged in with power on. C2111 is a speed up capacitor.

Q2114 and Q2124 compose a current mode switch. When Q2124 is on, CR2133 is off and the calibrator voltage (at J2134) is virtually zero. When Q2114 turns on, the current in Q2124 is diverted through Q2114 and the calibrator output voltage is determined solely by the current through R2131 and R2132. R2133 keeps the output impedance at 450 Ω when CR2133 is off. R2124 damps the resonant circuit created by the inductance of CR2133 and the collector capacitance of Q2124. Schottky diodes, CR2124, and CR2133, are used for low capacitance fast switching. CR2124 keeps Q2124 from saturation.

Risetime of the calibrator is less than 1 ns only when terminated in a 50 Ω load. The negative-going edge is not suitable for checking amplifier transient response.

http://manoman.sqhill.com

MAINTENANCE

Introduction

This section of the manual contains maintenance information for use in preventive maintenance, corrective maintenance, or troubleshooting of the 485.

Cover Removal

WARNING

Dangerous potentials exist at several points throughout this instrument. When the instrument is operated with the cover removed, do not touch exposed connections or components. Some transistors have voltage present on their cases. Disconnect power before cleaning the instrument or replacing parts.

1. Move handle away from front of instrument and snap front plastic cover in place.

2. Place instrument front panel down on working surface and remove the rear feet (four screws).

3. Work the small, blue rear panel rim away from the back of the instrument. It may stick in place, due to EMI finger stock. The edge opposite the BNC connectors must tip up first in order to clear the BNC connectors.

4. Back the Accessory pouches large retaining screw out so that its tip will clear the back panel for removal of the wrap-around cover, and slip the cover up and off the instrument.

Reinstalling the Cover

1. Orient the instrument face down (with the plastic knob cover in place) on a working surface.

2. Slide the wrap-around cover on using care to avoid pinching any cables. Make sure that the cover edge is inserted into the EMI gasket groove around the full periphery.

3. Work the blue rear panel rim into place at the rear end. Slip the edge over the BNC connectors first and press the ring down around the EMI finger stock.

4. Set the feet and screws in place and recheck that the front end edge of the cover is iin the front panel EMI gasket groove. Tighten the four screws of the rear feet to a snug fit. Don't over-tighten these screws. Retighten the pouch retaining screw.

The cover protects this instrument from dust in the interior and also provides protection to personnel from the operating potentials present. In addition, it reduces the EMI radiation from the instrument or EMI interference to the display due to other equipment.

WARNING

Extreme caution must be used when troubleshooting in the Power Supply, due to the line voltage and the high potentials present. Refer to the discussion entitled Troubleshooting the Power Supply for troubleshooting information.

PREVENTIVE MAINTENANCE

General

Preventive maintenance consists of cleaning, visual inspection, lubrication, etc. Preventive maintenance performed on a regular basis may prevent instrument breakdown and will improve the reliability of this instrument. The severity of the environment to which the 485 is subjected determines the frequency of maintenance. A convenient time to perform preventive maintenance is preceding recalibration of the instrument.

Cleaning

General. The 485 should be cleaned as often as operating conditions require. Accumulation of dirt in the instrument can cause overheating and component breakdown. Dirt on components acts as an insulating blanket and prevents efficient heat dissipation. It also provides an electrical conduction path which may result in instrument failure. The cover provides protection against dust in the interior of the instrument. Operation without the cover in place necessitates more frequent cleaning.

CAUTION

Avoid the use of chemical cleaning agents which might damage the plastics used in this instrument. Avoid chemicals which contain benzene, toluene, xylene, acetone or similar solvents. Recommended cleaning agent is isopropyl alcohol.

Switch Contacts. Most of the switching in the 485 is accomplished with circuit-board mounted, cam-actuated contacts. Care must be exercised to preserve the high-frequency characteristics of these switches. Seldom is switch maintenance necessary, but if it is required, observe the following precautions.

http://manoman.sqhill.com

Cleaning the switch contacts should only be done using isopropyl alcohol or a solution of 1% Joy detergent and 99% water. Do not use acetone, MEK, MIBK, benzol, toluol, carbon tetrachloride, trichlor, trichlene, methyl alcohol, methylene chloride, sulfuric acid, or Freon TC-TE-TF-22-TA-12.

Air Filter. The air filter should be visually checked every few weeks and cleaned or replaced if dirty. More frequent inspections are required under severe operating conditions. If the filter is to be replaced, order new air filters from your local Tektronix Field Office or representative; order by Tektronix Part No. 378-0036-01. The following procedure is suggested for cleaning the filter.

1. Remove the filter by pulling it out of the retaining frame on the rear panel. Be careful not to drop any of the accumulated dirt into the instrument.

2. Flush the loose dirt from the filter with a stream of hot water.

3. Place the filter in a solution of mild detergent and hot water and let it soak for several minutes.

4. Squeeze the filter to wash out any dirt which remains.

5. Rinse the filter in clean water and allow it to dry.

6. Coat the dry filter with an air-filter adhesive (available from air conditioner suppliers or order Tektronix Part No. 006-0580-00).

7. Let the adhesive dry thoroughly.

8. Re-install the filter in the retaining frame.

Exterior. Loose dust accumulated on the outside of the 485 can be removed with a soft cloth or small brush. The brush is particularly useful for dislodging dirt on and around the front-panel controls. Dirt which remains can be removed with a soft cloth dampened in a mild detergent and water solution. Abrasive cleaners should not be used.

CRT. Clean the plastic light filter, and the CRT face with a soft, lint-free cloth dampened with denatured alcohol.

The CRT mesh filter (furnished with EMI Option 4 only) can be cleaned in the following manner:

1. Hold the mesh filter in a vertical position and brush lightly with a soft No. 7 water-color brush to remove light coatings of dust or lint.

2. Greasy residues or dried-on dirt can be removed with a solution of warm water and a neutral-pH liquid detergent. Use the brush to lightly scrub the filter.

3. Rinse the filter thoroughly in clean water and allow to air dry.

4. If any lint or dirt remains, use clean low-pressure air to remove it. Do not use tweezers or other hard cleaning tools on the filter, as the special finish may be damaged.

5. When not in use, store the mesh filter in a lint-free, dust-proof container such as a plastic bag.

Interior. Dust in the interior of the instrument should be removed occasionally due to its electrical conductivity under high-humidity conditions. The best way to clean the interior is to blow off the accumulated dust with dry, low-pressure air. Remove any dirt which remains with a soft paint brush or a cloth dampened with a mild detergent and water solution. A cotton-tipped applicator is useful for cleaning in narrow spaces or for cleaning ceramic terminal strips and circuit boards.

The high-voltage circuits, particularly parts located in the high-voltage compartment and the area surrounding the post-deflection anode leads, should receive special attention. Excessive dirt in these areas may cause high-voltage arcing and result in improper instrument operation.

Lubrication

The potentiometers, cam switches and pushbutton switches used in this instrument are factory lubricated and should not require further lubrication.

The fan-motor bearings are sealed and do not require lubrication.

http://manoman.sghill.com

Visual Inspection

The 485 should be inspected occasionally for such defects as broken connections, broken or damaged ceramic strips, improperly seated semiconductors, damaged or improperly installed circuit boards, and heat-damaged parts.

The corrective procedure for most visible defects is obvious; however, particular care must be taken if heat-damaged components are found. Overheating usually indicates other trouble in the instrument; therefore, it is important that the cause of overheating be corrected to prevent recurrence of the damage.

Semiconductor Checks

Periodic checks of the semiconductors in the 485 are not recommended. The best check of semiconductor performance is actual operation in the instrument. More details on checking semiconductor operation are given under troubleshooting.

Recalibration

To ensure accurate measurements, check the calibration of this instrument after each 1000 hours of operation or every six months if used infrequently. In addition, replacement of components may necessitate recalibration of the affected circuits. The calibration procedure can also be helpful in localizing certain troubles in the instrument. In some cases, minor troubles may be revealed and/or corrected by recalibration.

An elapsed-time meter is installed on the rear panel. This meter provides a full-scale indication of 5,000 hours of operating time and can be used to indicate when recalibration is necessary. Each minor division on this meter indicates 200 hours of operation. When the elapsed-time meter reaches 5,000 hours (full scale), it should be replaced.

TROUBLESHOOTING

Introduction

The following information is provided to facilitate troubleshooting of the 485. Information contained in other sections of this manual should be used along with the following information to aid in locating the defective component. An understanding of the circuit operation is helpful in locating troubles, particularly where integrated circuits are used. See the Circuit Description section for this information.

Troubleshooting Aids

Diagrams. Complete circuit diagrams are given on fold-out pages in the Diagrams section. The component number and electrical value of each component in this instrument are shown on the diagrams (see first page of the Diagrams section for definition of the reference designators used to identify components in this instrument). Each main circuit is assigned a series of component numbers. Table 4-1 lists the main circuits in the 485 and the series of component numbers assigned to each. Important voltages and waveforms are also shown on the diagrams. The portions of the circuit mounted on circuit boards are enclosed with blue lines.

TABLE 4-1

Component Numbers

Diagram Number	Circuit	Component Numbers On Diagrams
1	ATTEN	1-199
2	PREAMPS	200-399
3	VERT SW	400-499
4	TRIG AMP	500-599
5	VERT AMP	600-699
6	A TRIG GEN	700-849
7	A TIME-BASE	850-999
8	B TRIG GEN	1000-1149
9	B TIME-BASE	1200-1299
10	TIMING SW	1400-1479
11	HORIZONTAL AMP	1300-1399, 1150-1199
12	LOGIC	1500-1599
13	CRT	1600-1799
14	POWER INVERTER	1800-1849, 1900-1959
15	POWER SUP	2000-2099
16	CALIBRATOR & FAN	1480-1499, 2100-2139

Circuit Boards. Circuit board assembly numbers are used on the diagrams and in the parts list to aid in locating the boards. Pictures of the circuit boards are located in the Diagrams section, on the back of the page opposite the circuit diagram, to aid the cross-referencing between the diagrams and the circuit-board pictures. Each electrical component on the boards is identified by its circuit

http://manoman.sqhill.com

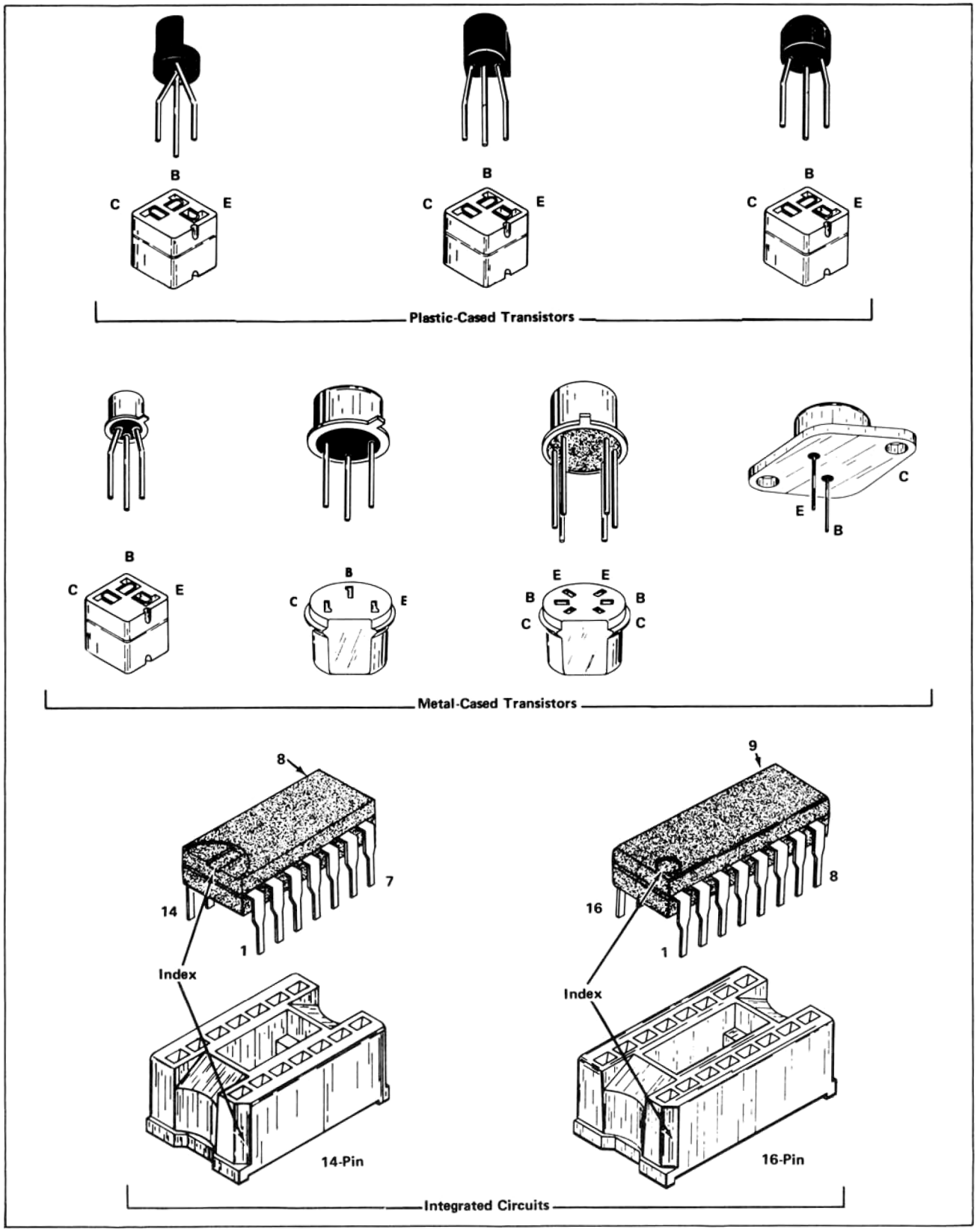

Fig. 4-1. Electrode configuration for semiconductors in this instrument.

http://manoman.sqhill.com

number. The circuit boards are also outlined on the diagrams with a blue line to show which portions of the circuit are located on a circuit board.

Wiring Color-Code. All insulated wire and cable used in the 485 is color-coded to facilitate circuit tracing. Table 4-2 gives the wiring color-code used in this instrument.

WARNING

This color code applies to leads within the 485 only. Color code of the AC power cord is:

Black	*Line*
White	*Neutral*
Green	*Safety earth (ground)*

TABLE 4-2

Wiring Color Code

Supply or Function	Background Color	Stripe[1]
+15 volts	Red	Yellow
+9 volts	Red	Orange
+5.5 volts	Red	Brown
+5.0 volts	Red	Black
−5.0 volts	Violet	Black
−5.5 volts	Violet	Red
−9 volts	Violet	Orange
−15 volts	Violet	Yellow

Other power supply voltages are conducted by the comb connectors.

Semiconductor Lead Configuration. Fig. 4-1 shows the lead configuration for the semiconductors used in this instrument. This view is as seen from the bottom of the semiconductors.

[1] **If more than one stripe appears on lead, extra stripes are for lead identification only (for circuit tracing).**

Troubleshooting Equipment

The following equipment is useful for troubleshooting the 485.

1. Transistor Tester

Description: Dynamic-type tester. Must be capable of measuring reverse breakdown voltages of at least 400 volts.

Recommended type: Tektronix Type 576 Transistor-Curve Tracer.

2. Multimeter

Description, 10 megohm input impedance and 0 to 500 volts range, AC and DC; ohmmeter, 0 to 50 megohms. Accuracy, within 3%. Test probes must be insulated to prevent accidental shorting.

NOTE

A 20,000 ohms/volt VOM can be used to check the voltages in this instrument if allowances are made for the circuit loading of the VOM at high-impedance points.

3. Test Oscilloscope

Description: Frequency response, DC to 100 megahertz minimum; deflection factor, 5 millivolts to 5 volts/division.

Purpose: To check operating waveforms in this instrument.

4. Isolation Transformer

Description: 1:1 turns ratio, 300 volt-amperes minimum rating, 50-60 cycle. Must have three-wire power cord, plug, and receptacle with ground connection carried through from input to output.

Purpose: To isolate the 485 from the line potential when troubleshooting in the power supply.

Recommended type: Stancor #P6298 (for 115-volt line only) modified to include three-wire power cord, plug, and receptacle.

http://manoman.sqhill.com

5. Variable Autotransformer

Description: Output variable from 0 to 140 volts, 10 amperes minimum rating. Must have three-wire power cord, plug, and receptacle.

Purpose: To vary the input line voltage when troubleshooting in the power supply.

Recommended type: General Radio W10MT3W Metered Variac Autotransformer.

Troubleshooting Techniques

IMPORTANT

Special techniques are required to safely troubleshoot certain areas of this instrument. Read Troubleshooting Techniques and Special Troubleshooting Information completely before beginning actual troubleshooting.

Power Supply. Incorrect operation of all circuits often indicates trouble in the power supply. Check first for correct voltage of the individual supplies. However, a defective component elsewhere in the instrument can appear as a power-supply trouble and may also affect the operation of other circuits. Table 4-3 lists the tolerances of the power supplies in this instrument. These voltages are measured between the power-supply and ground test points (on Low-Voltage Regulator board). If a power-supply voltage is within the listed tolerance, the supply can be assumed to be working correctly. If outside the tolerance, the supply may be misadjusted or operating incorrectly. Use the procedure given in the Calibration section to adjust the power supplies.

Power Supply Interaction. The semi-regulated supplies ±5.5, ±15, +25, +120, and +180 will track the adjustment of the +59.4-volt supply.

Regulated supplies ±5.0 and ±9.0 will track with +50. The cathode regulator will interact with both +50 and +59.4-volt supplies.

NOTE

See the specific information in this section on Troubleshooting the Power Supply for further information.

Check Voltages and Waveforms. Often the defective component can be located by checking for the correct voltage or waveform in the circuit. Typical voltages are given on the diagrams and power supply waveforms are shown in Fig. 4-2 in this section.

TABLE 4-3

Power Supply Tolerance and Ripple (Referenced to TP GND)

Power Supply	Tolerance	Maximum Ripple (Peak to Peak)
+59.4 volts	±0.25 V	150 mV
+50 volts	±0.1 V	5 mV
Cath Reg (+95 volts)	±8.0 V (Beam Off)	
+5 volts	±0.1 V	10 mV
−5 volts	±0.1 V	10 mV
+9 volts	±0.15 V	10 mV
−9 volts	±0.15 V	10 mV
+15 volts	±0.25 V	20 mV
−15 volts	±0.25 V	20 mV
+25 volts	±0.6 V	50 mV
+120 volts	±2.4 V	300 mV
+180 volts	±3.6 V	1.0 volt
−2950 volts	±50.0 V	150 mV (Beam Off)

NOTE

Voltages are not absolute and may vary slightly between instruments. To obtain operating conditions similar to those used to take these readings, see the VOLTAGE CONDITIONS listed on each diagram page.

A. SEMICONDUCTORS.

CAUTION

POWER switch must be turned off before removing or replacing semiconductors.

A good check of transistor operation is actual performance under operating conditions. A transistor can most effectively be checked by substituting a new component for it (or one which has been checked previously). However, be sure that circuit conditions are not such that a replacement transistor might also be damaged. If substitute transistors are not available, use a dynamic tester. Static-type testers are not recommended, since they do not check operation under simulated operating conditions.

http://manoman.sqhill.com

Integrated circuits can be checked with a voltmeter, test oscilloscope, or by direct substitution. A good understanding of the circuit description is essential to troubleshooting circuits using integrated circuits. In addition, operating waveforms, logic levels, and other operating information for the integrated circuits are given in the Circuit Description section. Use care when checking voltages and waveforms around the integrated circuits so that adjacent leads are not shorted together. A convenient means of clipping a test probe to the 14- and 16-pin integrated circuits is with an integrated-circuit test clip. This device also doubles as an integrated-circuit extraction tool.

Special Troubleshooting Information

General. The following information provides a step-by-step procedure to aid in the troubleshooting of some of the more complex circuits and/or systems in the 485. A thorough understanding of the circuit operation is essential before troubleshooting in these areas. Read the applicable portions of the Circuit Description in Section 3 before proceeding with troubleshooting. This troubleshooting procedure refers to the diagrams, operating voltages, and waveforms in Section 8 and Fig. 4-2. Specifications for the troubleshooting equipment referred to in these procedures are given earlier in this section under Troubleshooting Equipment.

Troubleshooting the Power Supply. Table 4-4 gives a guide to troubleshooting the power supply of the 485.

A short on a semi-regulated supply may lower the transformer voltage so far that no supply can perform. An overloaded supply often discharges very fast when the inverter shuts off. Isolate shorts and overloads by withdrawing and replacing all connectors one by one; however, comb connectors BB, CC, DD, S, T, U, V, and W must not be removed with power on. With power off, any or all of the comb connectors can be removed for troubleshooting with an ohmmeter.

To detect a short in the −2950 V supply, perform the following: 1) Turn power off: 2) Remove comb U, and bend pin 3 to prevent contact; 3) Re-install comb U and turn power on.

If other supplies now perform correctly, locate and repair the short in the −2950 V supply. Turn power off, straighten pin 3 and re-install comb U.

WARNING

Line AC and stored DC potentials are present on the Inverter circuit board and on the transformer circuit board. The stored DC remains long after the instrument is disconnected from the power line. Verify that the line cord is disconnected and that the line storage capacitors, C1822 and C1823, are completely discharged before attempting any repairs or ohmic measurements. The stored DC voltage can be measured between TP1834 (POS) and TP1844 (NEG). If manual discharge is necessary use a 1.5 k 2 W insulated resistor with insulated leads. USE EXTREME CAUTION.

TABLE 4-4

Power Supply Troubleshooting

Trouble Symptom	Checks to Make	Comments
Inverter starts then shuts off at slow rate (3 Hz or less).	Check Balance Node TP1951 during 20 ms "sampling period"	BAL T.P. more positive than +200 mV means short on negative supply or overcurrent in H.V. winding of T1960. BAL T.P. more negative than −200 mV means short on positive supply or high beam current. Error on BAL T.P. stops inverter. SEE BALANCE NODE NOTE preceding Fig. 4-2.
	Check inverter current TP1926 during 20 ms "sampling period"	If current remains at limit level for entire sampling period, U1910 will stop inverter. Possible short on semi-regulated supply.
	Check Line Stop TP1918 during 20 ms "sampling period". Check Line Selector switch for correct position.	If proper AC voltage from T1801 does not reach pin 4 of U1910, TP1918 will go positive stopping the inverter.

http://manoman.sqhill.com

TABLE 4-4 (cont)

Trouble Symptoms	Checks to Make	Comments
Inverter starts then shuts off at fast rate (10 Hz or faster).	Check comb connector "R" for proper installation.	Overvoltage Stop circuit stops inverter when connector is out.
	Check power from T1848 reaching U1910 Pin 6 = +7.5 Pin 7 = –2 V	Stop monostable will stop inverter if U1910 does not have power to function.
	Check secondary voltages for overvoltage.	Overvoltage Stop circuit stops inverter if U1910 does not regulate.
Excessive ripple on semi-regulated supplies.	Look for an open rectifier diode. Compare ripple frequency on the input capacitor of each Semi-regulated Supply.	Due to symmetry of operation an open rectifier on one supply will cause ripple on all supplies.
	See Table 4-3 for max output ripple values.	Matching of the forward voltage drop of the two rectifiers in a supply may be necessary to avoid excess ripple.
Inverter won't start.	Check for blinking neon oscillator DS1824 on Inverter board.	If DS1824 is blinking, Line Input circuit is okay. If DS1824 is not blinking, check for open line fuse or other malfunction.
	Check for start pulse with AC-coupled probe at TP1835.	AC-coupled probe required due to lack of ground reference in Inverter circuit. Start pulse should occur each line cycle.
	Check Q1900 and Q1902 for shorts.	If either transistor is shorted, the inverter will not start.
Line fuse opens when power is turned on.	Check Line Selector switch for correct position.	If Line Selector is correct, check semiconductors on Inverter board with line cord disconnected and all capacitors completely discharged.
No intensity control or poor focus control (see Fig. 4-2).	Check DC restorer diodes in CRT circuit. Check for proper levels at outputs of Z Axis and Auto Focus circuits.	If diodes check okay compare circuit waveforms to those given in Fig. 4-2.
No high voltage.	Check Cathode Multiplier and Anode Multiplier circuits.	The Transformer board can be removed by first removing the Power board and Inverter board, disconnect Line Cord and wait five minutes for Line Storage capacitors to discharge before removing Inverter board.

NOTE

For additional information see circuit descriptions, Table 4-2, and circuit board connection map at the end of this section. Waveforms for comparison are given in Fig. 4-2A through Fig. 4-2P.

http://manoman.sqhill.com

BALANCE NODE NOTE

The balance node (TP1951) acts as an "OR" circuit for various faults which will stop the inverter. To isolate the fault, determine the voltage level at TP1951 during the 20 ms sampling period which immediately follows the turn-on transient of approximately 6 ms. If the balance node is more positive than +200 mV, look for a short on a negative supply or over-current in the H.V. winding of T1960. A H.V. current fault is present if the voltage at TP1958 (H.V.) goes positive during the sampling period, causing CR1958 to conduct. When observing power supplies, check to see that each supply comes up to nominal value during the sampling period. If the balance node is more negative than −200 mV, look for a short on a positive supply or high beam current. A beam limit fault is present if the voltage at TP1959 (LIM) goes negative during the sampling period causing CR1959 to conduct. A fault in the vertical circuit (output leads shorted, etc.) will cause Q688 to crowbar the +25 V supply which stops the inverter via the balance node. If the relays click each time the inverter starts, some semi-regulated supplies are briefly coming up to value. Look for a fault on +25 V, Beam Limit Shutdown, or a short on one of the regulated supplies (+50, +9, −9, +5, or −5 V).

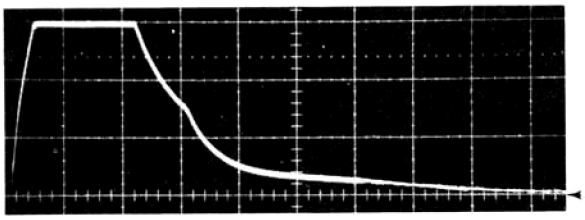

A.) At TP +15. Power Supply coming up to nominal value during sampling period, then falling off as supply shuts down due to overload.

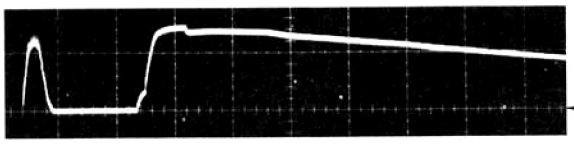

B.) At TP1951. Balance Node during sampling period with all supplies normal (test oscilloscope externally triggered on TP1926) then short applied to −9 V supply to cause second positive swing.

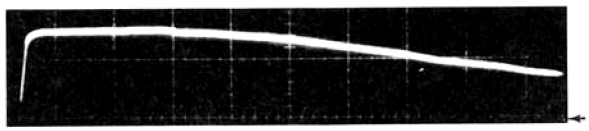

C.) At TP1951 Balance Node during sampling period then falling off due to short on −9 V supply.

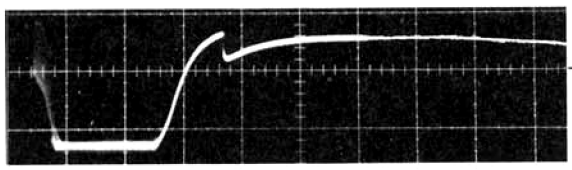

D.) At TP1951. Balance Node with power supply coming up during sampling period then falling off as supply shuts down due to short on +9 V supply.

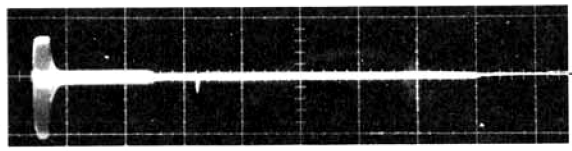

E.) At TP1958. H.V. Current Sens during sampling period with normal load.

Fig. 4-2. Power Supply waveforms. Test oscilloscope internally triggered unless otherwise noted. Fig. 4-2 continued on following pages.

http://manoman.sqhill.com

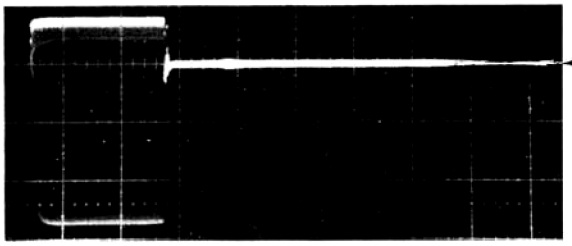

F.) At TP1958 H.V. Current Sens during sampling period with short on −2950 supply.

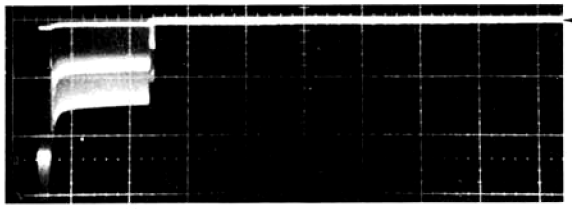

G.) At TP1926. Inverter Current Sens during sampling period with all supplies normal.

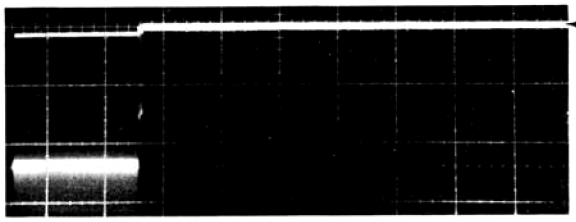

H.) At TP1926. Inverter Current Sens during sampling period with short on +15 supply.

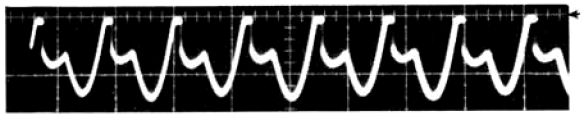

I.) At TP1926. Inverter Current Sens during normal operation.

J.) At TP1919. Mono Ramp during normal operation.

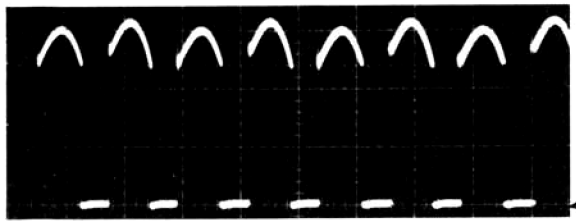

K.) At collector of Q1900 during normal operation.

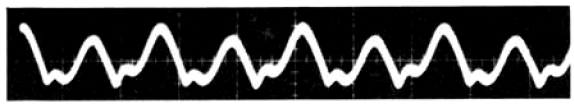

L.) At TP +59.4. Ripple on +59.4 supply during normal operation (AC coupled).

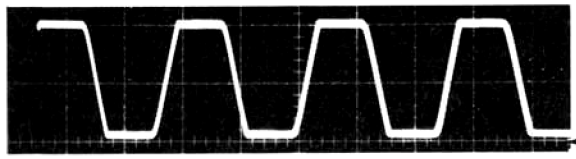

M.) X10 Probe at Anode of CR1660 Normal operation with intensity off.

Fig. 4-2. Power Supply Waveforms cont.

http://manoman.sqhill.com

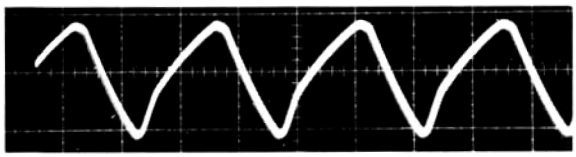

N.) AC coupled at TP1665. Normal operation with intensity off.

O.) X10 Probe at Anode of CR1656 Normal operation with intensity off.

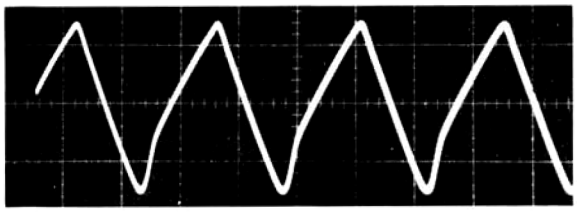

P.) AC coupled at TP1653. Normal operation with intensity off.

Fig. 4-2. Power Supply Waveforms cont.

CORRECTIVE MAINTENANCE

General

Corrective maintenance consists of component replacement and instrument repair. Special techniques required to replace components in this instrument are given here.

If any defective parts are located, follow the replacement procedures given in this section. Be sure to check the performance of any circuit that has been repaired or that has had any electrical components replaced.

Obtaining Replacement Parts

Standard Parts. All electrical and mechanical part replacements for the 485 can be obtained through your local Tektronix Field Office or representative. However, many of the standard electronic components can be obtained locally in less time than is required to order them from Tektronix, Inc. Before purchasing or ordering replacement parts, check the parts lists for value, tolerance, rating, and description.

NOTE

When selecting replacement parts, it is important to remember that the physical size and shape of a component may affect its performance in the instrument, particularly at high frequencies. All replacement parts should be direct replacements unless it is known that a different component will not adversely affect instrument performance.

Special Parts. In addition to the standard electronic components, some special components are used in the 485. These components are manufactured or selected by Tektronix, Inc. to meet specific performance requirements, or are manufactured for Tektronix, Inc. in accordance with our specifications. Most of the mechanical parts used in this instrument have been manufactured by Tektronix, Inc. Order all special parts directly from your local Tektronix Field Office or representative.

Ordering Parts. When ordering replacement parts from Tektronix, Inc., include the following information:

1. Instrument type.

2. Instrument serial number.

3. A description of the part (if electrical, include circuit number).

4. Tektronix Part Number.

Soldering Techniques

WARNING

Disconnect the instrument from the power source before soldering.

http://manoman.sqhill.com

The reliability and accuracy of this instrument can be maintained only if proper soldering techniques are used when repairing or replacing parts. General soldering techniques which apply to maintenance of any precision electronic equipment should be used when working on this instrument. Use only 60/40 rosin-core, electronic-grade solder. The choice of soldering iron is determined by the repair to be made. When soldering on circuit boards, use a 35- to 40-watt pencil-type soldering iron with a 1/8-inch wide, wedge-shaped tip. Keep the tip properly tinned for best heat transfer to the solder joint. A higher wattage soldering iron may separate the wiring from the base material. Avoid excessive heat; apply only enough heat to remove the component or to make a good solder joint. Also, apply only enough solder to make a firm solder joint; do not apply too much solder.

CAUTION

The Vertical Preamplifier Attenuator circuit boards are made of material easily damaged by excessive heat. When soldering to these boards, do not use a soldering iron with a rating of more than approximately 15 watts. Avoid prolonged applications of heat to circuit-board connections. Use only isopropyl alcohol when cleaning this circuit board.

For metal terminals (e.g., switch terminals, potentiometers, etc.) a higher wattage-rating soldering iron may be required. Match the soldering iron to the work being done. For example, if the component is connected to the chassis or other large heat-radiating surface, it will require a 75-watt or larger soldering iron. The pencil-type soldering iron used on the circuit board can be used for soldering switch terminals, potentiometers, or metal terminals mounted in plastic holders.

Component Replacement

WARNING

Disconnect the instrument from the power source before replacing components.

General. The exploded-view drawings associated with the Mechanical Parts List (located at rear of manual) may be helpful in the removal or disassembly of individual components or sub-assemblies.

WARNING

Line AC and stored DC potentials are present inside the power unit. This instrument should be operated with an isolation transformer whenever troubleshooting the circuitry on that board. Follow the recommended troubleshooting procedure given under Special Troubleshooting Information.

Circuit Board Replacement. If a circuit board is damaged beyond repair, the entire assembly including all soldered on components, can be replaced. Part numbers are given in the Parts List.

Most of the main circuit boards in this instrument plug onto the chassis or onto other circuit boards. Use the following procedure to remove the plug-on circuit boards (removal instructions for the exceptions will be given later).

To remove circuit boards first remove all plug-on type wiring and comb connectors. Plugs with more than one lead are indexed with the arrow on the board matching the arrow on the plug. A group of single plugs in the same area have abbreviations of the wire color silkscreened by the pin.

a. To remove circuit boards, remove all plug-on type wiring and comb connectors.

b. Remove all of the securing screws on the board.

c. Lift the board away from the instrument being careful not to bend any pins protruding from the board.

d. To replace the circuit board, position it so that the securing screws align with the mounting holes.

e. Do not tighten the securing screws until all of the comb connectors have been inserted.

f. Uniformly tighten the securing screws. Recommended torque is four to six inch-pounds.

TIMING BOARD REMOVAL.

a. Remove upper two rows of sweep board comb connectors.

b. Remove Horizontal Amplifier board.

http://manoman.sqhill.com

c. Remove Sweep board.

d. Remove Inverter board (see Inverter board removal procedure).

e. Remove shield around the rear portion of the Timing board.

f. Remove Timing switch knobs.

g. Remove the blue rear panel rim.

h. Remove the blue rear panel cover (10 screws).

i. Remove the fan blade.

j. Remove 8 screws holding the Timing board.

k. Tilt outside edge of the board up and carefully lift the board out of the instrument.

l. To install, reverse the procedure.

TRANSFORMER BOARD REMOVAL.

a. Slide Inverter board out of the way (see Inverter board removal procedure).

b. Remove the Sweep board.

c. Remove the Power board.

WARNING

A high voltage charge will remain on the Post Accelerating Anode lead after the instrument has been turned off. When disconnecting the Post Accelerating lead, pull it out in a manner that it will touch and discharge to the chassis ground immediately after clearing the housing (take care to avoid discharge to the nearby Vertical Deflection connections). This procedure must be repeated every time the Post Accelerating lead is removed. If it is connected and removed without the instrument being turned on, it will have accepted a charge from the Anode Multiplier and will again be dangerous when disconnected.

d. Disconnect the Post Accelerating Anode lead (top side of instrument). Unclamp the female connection housing for this lead.

e. Remove plastic shield on rear of the Horizontal Amplifier board. Remove the two comb connectors from under the shield and the one in front of the shield.

f. Remove the blue wrap-around rear panel rim.

g. Remove the blue rear panel cover (10 screws).

h. Disconnect the three plugs with leads that are connected to the CRT base socket at the rear of the oscilloscope.

i. Unclamp the interconnecting lead to the Inverter board.

j. Remove the Transformer board mounting screws (four No. 4 screws). This does not include the two No. 6 screws (transformer mounting).

k. Slide the Transformer board out.

l. To install the Transformer board, reverse this procedure.

m. Connect all interconnecting leads.

http://manoman.sqhill.com

INVERTER BOARD REMOVAL

WARNING

Line AC and stored DC potentials are present on the Inverter and Transformer boards. The stored DC remains long after the instrument is disconnected from the power line. Verify that the line cord is disconnected and that the line storage capacitors, C1822 and C1823, are completely discharged before attempting any repairs (wait three minutes after DS1824, located under the metal shield, stops flashing). The stored DC can be measured between TP1834 (POS) and TP1844 (NEG). If manual discharge is necessary use a 1.5 kΩ, 2 W insulated resistor with insulated leads. USE EXTREME CAUTION.

a. Remove the metal protective shield (4 screws).

b. Remove the 4 shield mounting standoffs so that the board can come straight out.

c. Remove the comb connector and unplug the 2 pin cable.

d. Remove the 4 screws holding the Inverter board and the 4 screws holding the insulating material of the two large transistors at the rear of the board.

e. To repair the Inverter board or gain access to the Transformer board, lift the Inverter board up and turn it to one side. It is not necessary to unsolder the primary leads.

f. For complete removal of the Inverter board, unsolder the three primary leads.

g. To install the board, reverse the procedure.

Semiconductor Replacement. Semiconductors should not be replaced unless actually defective. If removed from their sockets during routine maintenance, return them to their original sockets. Unnecessary replacement of semiconductors may affect the calibration of this instrument. When semiconductors are replaced, check the operation of the part of the instrument which may be affected.

CAUTION

POWER switch must be turned off before removing or replacing semiconductors.

Replacement semiconductors should be of the original type or a direct replacement. Fig. 4-1 shows the lead configuration of the semiconductors used in this instrument. Some plastic case transistors have lead configurations which do not agree with those shown here. If a replacement transistor is made by a different manufacturer than the original, check the manufacturer's basing diagram for correct basing. All transistor sockets in this instrument are wired for the standard basing as used for metal-cased transistors. Transistors which have heat radiators or are mounted on the chassis use silicone grease to increase heat transfer. Replace the silicone grease when replacing these transistors.

WARNING

Handle silicone grease with care. Avoid getting silicone grease in the eyes. Wash hands thoroughly after use.

An extracting tool should be used to remove the 14- and 16-pin integrated circuits to prevent damage to the pins. This tool is available from Tektronix, Inc. Order Tektronix Part No. 003-0619-00. If an extracting tool is not available when removing one of these integrated circuits, pull slowly and evenly on both ends of the device. Try to avoid having one end of the integrated circuit disengage from the socket before the other, as this may damage the pins.

Interconnecting Pin Replacement. The following information provides the replacement procedure for the various types of interconnecting methods.

A. CIRCUIT-BOARD PINS.

NOTE

A circuit-board replacement kit including necessary tools, instructions and replacement pins is available from Tektronix, Inc. Order Tektronix Part No. 040-0542-00.

To replace a pin which is mounted on a circuit board, first disconnect any pin connectors. Then, unsolder the damaged pin and pull it out of the circuit board with a pair

http://manoman.sqhill.com

of pliers. Be careful not to damage the wiring on the board with too much heat. Ream out the hole in the circuit board with a 0.031-inch drill. Remove the ferrule from the new interconnecting pin and press the new pin into the hole in the circuit board. Position the pin in the same manner as the old pin. Then, solder the pin on both sides of the circuit board. If the old pin was bent at an angle to mate with a connector, bend the new pin to match the associated pins.

B. CIRCUIT BOARD PIN SOCKETS.

The pin sockets on the circuit boards are soldered to the rear of the board. To replace one of these sockets, first unsolder the pin (use a vacuum-type desoldering tool to remove excess solder). Then, straighten the tabs on the socket and remove it from the hole in the circuit board. Place the new socket in the circuit-board hole and press the tabs down against the board. Solder the tabs of the socket to the circuit board; be careful not to get solder into the socket.

NOTE

The spring tension of the pin sockets ensures a good connection between the circuit board and the pin. This spring tension can be destroyed by using the pin sockets as a connecting point for spring-loaded probe tips, alligator clips, etc.

C. END-LEAD PIN CONNECTORS.

The pin connectors used to connect the wires to the interconnecting pins are clamped to the ends of the associated leads. To replace damaged end-lead pin connectors, remove the old pin connector from the end of the lead and clamp the replacement connector to the lead.

Some of the pin connectors are grouped together and mounted in a plastic holder; the overall result is that these connectors are removed and installed as a multi-pin connector. To provide correct orientation of this multi-pin connector when it is replaced, an arrow is stamped on the circuit board or chassis and a matching arrow is molded into the plastic housing of the multi-pin connector. Be sure these arrows are aligned as the multi-pin connector is replaced. If the individual end-lead pin connectors are removed from the plastic holder, note the color of the individual wires for replacement.

Cathode-Ray Tube Replacement. To replace the cathode-ray tube, proceed as follows:

WARNING

Use care when handling a CRT. Protective clothing and safety glasses should be worn. Avoid striking it on any object which might cause it to crack or implode. When storing a CRT, place it in a protective carton or set it face down in a protected location on a smooth surface with a soft mat under the faceplate to protect it from scratches. A high voltage charge remains on the Post Accelerating Anode lead after the instrument has been turned off. When disconnecting the Post Accelerating lead pull it out in a manner that it will touch and discharge to the chassis ground immediately after clearing the housing (take care to avoid discharge to the nearby vertical deflection connections). This procedure must be repeated every time the Post Accelerating lead is removed. If it is connected and removed without the instrument being turned on, it will have accepted a charge from the Anode Multiplier and will again be dangerous when disconnected.

1. Disconnect Post Accelerating lead.
2. Disconnect the 6 CRT deflection plate leads.
3. Remove rear panel for access to CRT base.
4. Remove CRT base connector.
5. Remove four screws from CRT bezel and remove bezel from the front of the instrument.
6. Push CRT carefully out the front of the instrument.

REPACKAGING FOR SHIPMENT

If the Tektronix instrument is to be shipped to a Tektronix Service Center for service or repair, attach a tag showing: owner (with address) and the name of an individual at your firm that can be contacted, complete instrument serial number and a description of the service required.

Save and re-use the package in which your instrument was shipped. If the original packaging is unfit for use or not available, repackage the instrument as follows:

1. Obtain a carton of corrugated cardboard having inside dimensions of no less than six inches more than the instrument dimensions; this will allow for cushioning. Refer to the following table for carton test strength requirements.
2. Surround the instrument with polyethylene sheeting to protect the finish of the instrument.
3. Cushion the instrument on all sides by tightly packing dunnage or urethane foam between carton and instrument, allowing three inches on all sides.
4. Seal carton with shipping tape or industrial stapler.

SHIPPING CARTON TEST STRENGTH

Gross Weight (lb)	Carton Test Strength (lb)
0-10	200
10-30	275
30-120	375
120-140	500
140-160	600

http://manoman.sqhill.com

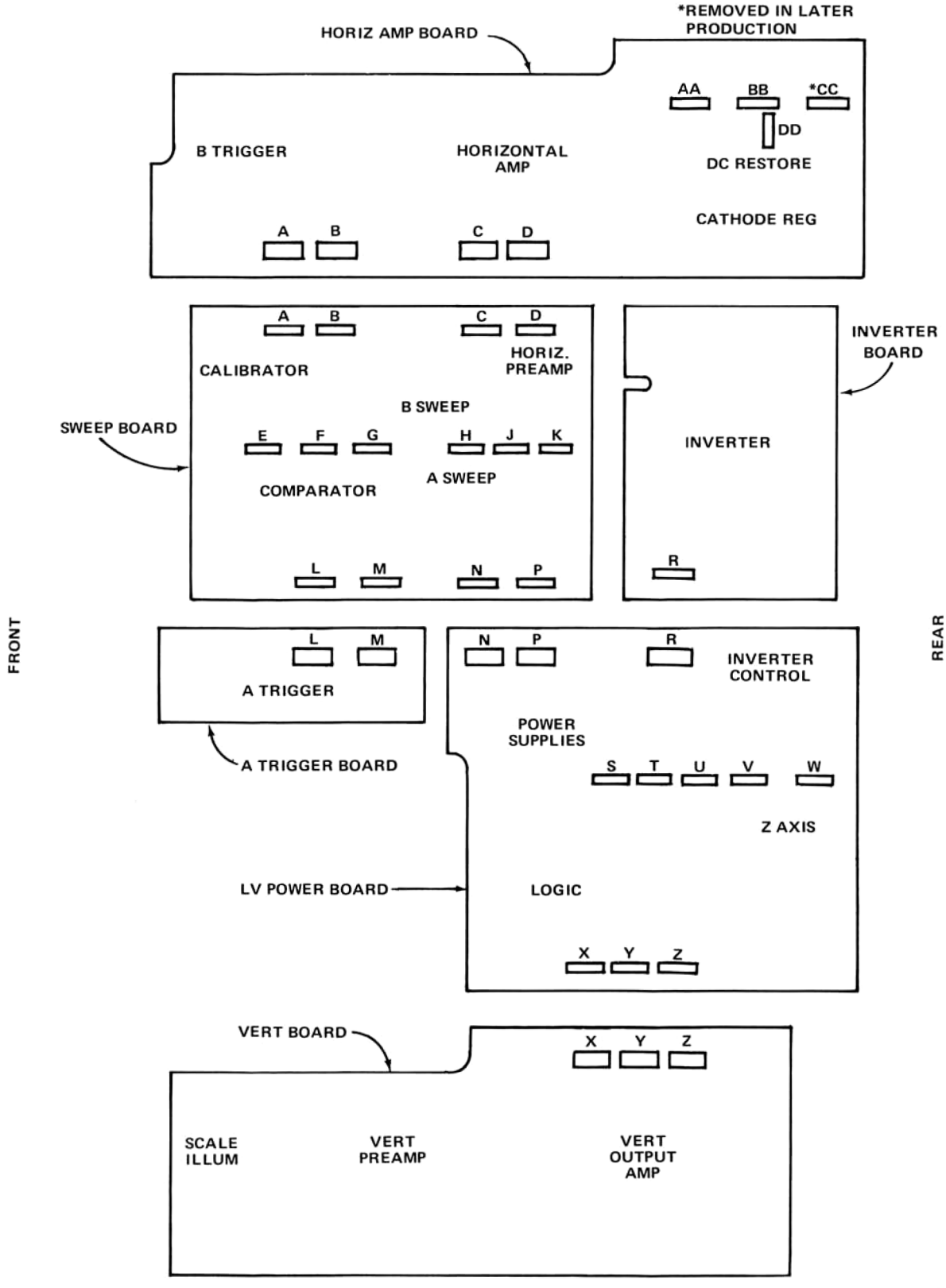

Fig. 4-3. Interboard comb connection locations.

http://manoman.sqhill.com

CALIBRATION

Introduction

To ensure instrument accuracy, check the calibration of the 485 after every 1000 hours of operation, or every six months if used infrequently. Before complete calibration, thoroughly clean and inspect the instrument as outlined in the Maintenance Section.

TEKTRONIX Field Service

Tektronix, Inc. provides complete instrument repair and recalibration at local Field Service Centers and the Factory Service Center. Contact your local TEKTRONIX Field Office or representative for further information.

Using This Procedure

Part 1 — Performance Check. Performance of this instrument can be checked without removing the covers or making internal adjustments. This procedure checks the instrument against the SPECIFICATION tolerances (Section 1). Screwdriver adjustments accessible from the outside of the instrument are adjusted in this procedure.

Part 2 — Calibration Procedure. Completion of each step in this procedure ensures that this instrument is correctly adjusted and performing within all listed tolerances.

Partial Calibration. A partial check or adjustment is often desirable after replacing components, or to touch up the adjustment of a portion of the instrument between complete recalibrations. To check or adjust only part of the instrument, set the controls according to Preliminary Control Settings, then start with the major section containing the part to be adjusted (horizontal, vertical, or triggers). To avoid unnecessary recalibration of other parts of the instrument, readjust only if the tolerance given in the CHECK — part of the step is not met. If readjusted, also check the calibration of any other steps listed in the INTERACTION part of this step.

TEST EQUIPMENT REQUIRED

The following test equipment and accessories, or its equivalent, is required for complete calibration of the 485. The equipment specifications given are the minimum necessary for accurate calibration and may be less than those of the listed test equipment. The test equipment must be operating within the listed specifications and correctly calibrated.

Not all of the listed test equipment is required for the Performance Check; those items not required for the Performance Check are indicated by footnote 1.

If equipment substitutes are made, the calibration setup may have to be altered to fit the requirements of that equipment. Detailed operating instructions for the test equipment are not given in this procedure. Refer to the test equipment instruction manual if further instruction is needed.

Special Calibration Fixtures

Special TEKTRONIX calibration fixtures are used in this procedure only where they aid instrument calibration. These special calibration fixtures are available from Tektronix, Inc. Order by part number through your local TEKTRONIX Field Office or representative.

Calibration Equipment Alternatives

All of the test equipment listed is required to completely check and adjust this instrument. Complete checking or adjustment, however, may not always be necessary or desirable. The user may only check selected characteristics, thereby reducing the amount of test equipment actually required. For example, the basic measurement capabilities of this instrument can be verified by checking vertical deflection accuracy using the two Standard Amplitude Calibrators; bandwidth and triggering using the two Constant-Amplitude Signal Generators; and horizontal timing accuracy using the Time-Mark Generator.

http://manoman.sqhill.com

TABLE 5-1

TEST EQUIPMENT

Description	Minimum Specifications	Usage	Examples of Applicable Test Equipment
Precision Multimeter (DVM)[1]	Range 0 to 180 V; accuracy within 0.01%.	Adjust: CAL 5 V. +59.4 and 50 V supplies; Vert Comp Plates; Grid Bias; Auto Focus; Main Vert Gain; 50 Ω Input Impedance. Check: Vert Linearity.	Data Precision Digital Multimeter Model 2400.
DC Voltmeter (VOM)[1]	0 to 4000 V; accuracy within 2%.	High Voltage measurement.	Triplett Model 630-NA or a precision divider with the DVM.
Time-Mark Generator	Marker output 2 ns to 0.5 s within 0.1% accuracy; trigger output 50 ns.	Adjust: Geometry; Horiz Gain; Cal 5 V freq; Y Axis; A timing; B timing; Differential timing; Delay Jitter.	TEKTRONIX Type 184 Time-Mark Generator. TEKTRONIX 2901 Time-Mark Generator.
Medium-Frequency Constant-Amplitude Signal Generator	2 MHz to 50 MHz; reference frequency, 50 kHz; output amplitude, 50 mV to 2 V P-P into 50 Ω; output accuracy, within 2%.	Adjust: A and B trigger; X-Y phasing. Check: Ext Z Axis blanking; CMR; Ext Trigger; Single Sweep; X-Y Bandwidth; Bandwidth limit.	TEKTRONIX Type 191 Constant Amplitude Signal Generator.
High-Frequency Constant-Amplitude Signal Generator	Frequency, 100 to 350 MHz; output amplitude, 0.5 to 5 V; reference frequency, 3 MHz; accuracy within 1%.	Vertical bandwidth check.	TEKTRONIX 067-0532-01 Calibration Fixture.
Test Oscilloscope	Bandwidth, DC to 100 MHz; deflection factor, 5 mV/div; accurate within 2%.	Adjust: Z Axis Compensation and risetime; Auto Focus; CH 1 Trigger Gain.	TEKTRONIX 465 with P6065 X10 probe.
Amplitude Calibrator and Comparator	Amplitude, 20 mV to 100 V; accurate to 0.25%.	Adjust: 1 MΩ amplifier gain. Check: 1 MΩ deflection factor. Ext Trig Level range.	TEKTRONIX 067-0502-01 Calibration Fixture.
50 Ω Amplitude Calibrator	12 mV to 2 V range.	Adjust: CH 1 and CH 2 Gain; Invert Gain; Added Mode Gain; X-Y Gain. Check: 50 Ω and 1 MΩ Gain match.	TEKTRONIX 067-0508-00 Calibration Fixture.
Tunnel Diode Pulser	Driven by the Type 106 Square-Wave Generator.	Adjust: 50 Ω and 1 MΩ transient response. Check: Ext Trig Delay Match; A Ext Trig response.	TEKTRONIX 067-0681-01 Calibration Fixture.

[1] Not required for Performance Check.

http://manoman.sqhill.com

TABLE 5-1

TEST EQUIPMENT (cont)

Description	Minimum Specifications	Usage	Examples of Applicable Test Equipment
Square-Wave Generator	Frequency Range, 100 Hz to 100 kHz; Amplitude variable 0.5 to 12 V.	Adjust: 50 Ω high frequency transient response; 50 Ω low frequency transient response; 1 MΩ 10 kHz transient response; 1 MΩ input attenuator compensations; Ext Trig indent delay match; A Ext Trig response.	TEKTRONIX Type 106 Square-Wave Generator.
2X Attenuator[1] (2 required)	Impedance, 50 Ω; accuracy, 2%; BNC connectors.	Used throughout the procedure for signal attenuation.	TEKTRONIX Part No. 011-0069-02.
5X Attenuator[1]	Impedance, 50 Ω; accuracy, 2%; BNC connectors.	Used throughout the procedure for signal attenuation.	TEKTRONIX Part No. 011-0060-02.
10X Attenuator	Impedance, 50 Ω; accuracy, 2%; BNC connector.	Used throughout the procedure for signal attenuation.	TEKTRONIX Part No. 011-0059-02.
T Connector	Connector, BNC.	Ext Trig checks.	TEKTRONIX Part No. 103-0030-00.
Termination (2 required)	Impedance, 50 Ω; accuracy, 2%; connectors, BNC.	CMR check.	TEKTRONIX Part No. 011-0049-01.
Cable (2 required)	Impedance, 50 Ω; type RG-58/U; length, 42 inch; connectors, BNC.	Used throughout the procedure for signal interconnection.	TEKTRONIX Part No. 012-0057-01.
GR thru-line termination	Impedance, 50 Ω; accuracy, 2%; connectors, GR874 to BNC male.	1 MΩ bandwidth check.	TEKTRONIX Part No. 017-0083-00.
Adapter	GR874 to BNC male.	50 Ω vertical bandwidth check.	TEKTRONIX Part No. 017-0064-00.
Screwdriver	Three-Inch shaft, 3/32 inch bit.	Used throughout the procedure to adjust variable resistors.	Xcelite R-3323.
Low Capacitance Screwdriver[1]	1 1/2 inch shaft.	Used throughout the procedure to adjust variable capacitors.	TEKTRONIX Part No. 003-0000-00.
Nylon Tuning Tool[1]	Fits 5/64 inch (ID) hex cores.	X-Y phasing.	Handle and insert TEKTRONIX Part No. 003-0307-00 and 003-0310-00.

http://manoman.sqhill.com

TABLE 5-1

TEST EQUIPMENT (cont)

Description	Minimum Specifications	Usage	Examples of Applicable Test Equipment
Input RC Normalizer[1]	1 MΩ x 20 pF; attenuation, 2X; connector, BNC.	1 MΩ input attenuator compensations.	TEKTRONIX Part No. 067-0538-00.
Cable	Impedance, 50 Ω; type RG-58/U; length, 18 inches; connectors, BNC.	Used throughout the procedure for signal interconnection.	TEKTRONIX Part No. 012-0076-00.
Dual Input Cable, BNC	Dual BNC.	Inserting identical signals into both channels.	TEKTRONIX Part No. 067-0525-00.

TABLE 5-2

TEST EQUIPMENT FOR OPTIONAL CHECK

Characteristic	Performance Requirement	Supplemental Information
VSWR AUTOTESTER with GRATICULE	100 to 350 MHz.	WILTRON COMPANY, Model 67.
561B/2B67/3A9	2 μV sensitivity.	Differential Amplifier.
or		
5103N/5B10N/5A22N	20 μV sensitivity.	Differential Amplifier.
or		
7403N/7B50/7A22	20 μV sensitivity.	Differential Amplifier.

PART 1 — PERFORMANCE CHECK

Connect the 485 to a power source which meets the specified voltage and frequency requirements. Press the POWER pushbutton to turn the 485 on and allow a 20 minute instrument warmup before commencing the Performance checks. The Performance checks in Part 1 of this section may be performed anywhere within the −15°C to +55°C operating ambient temperature range unless otherwise specified.

1. CHECK EXT Z AXIS BLANKING

a. Apply 0.2 V P-P of 20 MHz from Type 191 Signal Generator to EXT Z AXIS blanking (rear panel) and A EXT TRIG; A SOURCE SW to EXT; HORIZ DISPLAY to A; TIME/DIV to 0.1 μs.

b. Adjust trigger LEVEL for TRIG'D LIGHT.

c. At normal intensity, check for intensity modulation.

d. Change generator to 2 V P-P of 2 MHz; set TIME/DIV to 0.5 μs.

e. Turn INTENSITY higher and check for intensity modulation.

2. CHECK OUTPUT WAVEFORMS (With Sweeps Running at 1 ms/div)

a. With test oscilloscope, check the following outputs (located on the rear panel).

b. A and B GATES, approximate amplitude 4 V (0.5 V into 50 Ω).

c. A SAWTOOTH, approximate amplitude to 10 V (0.5 V into 50 Ω).

http://manoman.sqhill.com

3. ADJUST TRACE ROTATION

a. Position trace to graticule center.

b. Adjust TRACE ROTATION (rear panel) so trace parallels the center graticule line.

4. CHECK B SWEEP TIMING ACCURACY

a. Check timing over center eight graticule divisions.

b. Position one time mark to 1 and read error at 9.

NOTE

+15°C to +35°C	*−15°C to +55°C*
1 ns to 20 ns; within 0.24 division (3%)	*0.4 div (5%)*
50 ns to 0.1 s; within 0.16 division (2%)	*0.32 div (4%)*
0.2 s and 0.5 s; within 0.24 division (3%)	*0.4 div (5%)*

5. CHECK A SWEEP TIMING ACCURACY

NOTE

+15°C to +35°C	*−15°C to +55°C*
1 ns to 20 ns; within 0.24 division (3%)	*0.4 div (5%)*
50 ns to 0.1 s; within 0.16 division (2%)	*0.32 div (4%)*
0.2 s to 0.5 s; within 0.24 division (3%)	*0.4 div (5%)*

6. CHECK DELAY TIME ACCURACY, 10 ns/div to 0.5 s/div (+15°C to +35°C only)

a. Use time marks that give 1 to 5 markers/div on the A display. Use B TIME/DIV of 1 ns for A TIME/DIV settings of 10 ns through 0.1 μs. For A TIME/DIV setting of 0.2 μs and slower, maintain an A:B ratio of 100:1.

b. Set the DELAY TIME POSITION (DTP) dial exactly to the reference position (1.0 except as shown in table below). Use the horizontal POSITION control to move the marker on the B display to a reference position.

c. Rotate the DTP to 9.0 and then slightly from 9.0 to place the B display marker to the same screen reference position. Read the error from (9.00) in minor dial divisions on the DTP dial.

TABLE 5-3

A Time/Div	Reference DTP Position	Maximum DTP Dial Error at Setting near 9.0 (minor divisions)
10 ns	4.0	7
20 ns	2.0	9
50 ns to 1 ms	1.0	5
2 ms to 0.5 s	1.0	9

7. CHECK B ENDS A OPERATION

a. HORIZ DISPLAY to INTEN; A TIME/DIV to 1 ms; B TIME/DIV to 0.1 ms; A TRIGGER HOLDOFF to B ENDS A; SWEEP MODE to AUTO.

b. Rotate DTP; check that sweep ends after the intensified zone.

8. CHECK CH 1 LIGHT EMITTING DIODES (LED'S)

a. Check that the probe lights the corresponding LED, e.g., X10 probe lights X10 LED.

b. Check that CH 2 LED'S are off with VERT MODE in CH 1.

c. Check that CH 1 LED'S are on in CH 1, ALT, CHOP, ADD, and X-Y.

d. If probes are not available: an 11 kΩ resistor to ground from the code ring (around each input BNC) lights the X10 LED. A 6.8 kΩ resistor lights the X100 LED and a short circuit causes trace ident.

9. CHECK CH 2 LED'S

a. Check that the probe lights the corresponding LED.

b. Check that CH 1 LED'S are off with VERT MODE in CH 2.

c. Check that CH 2 LED'S are on in CH 2, ALT, CHOP, ADD, and X-Y.

10. CHECK TRACE IDENT FUNCTION CH 1 and CH 2

a. Check TRACE IDENT function on the probe, shifts the trace approximately 0.2 div up.

http://manoman.sqhill.com

b. Check that the LED for that channel turns off.

11. CHECK INPUT LIGHTS CH 1 and CH 2

a. Check that 50 Ω is lit when 50 Ω/1 MΩ pushbutton is out.

b. Check that 1 MΩ is lit when 50 Ω/1 MΩ pushbutton is in.

12. CHECK BEAM FINDER

a. Check that trace remains within the graticule area with BEAM FINDER depressed.

b. Check beam finder operation under all combinations of HORIZONTAL, CH 1 and CH 2 POSITION controls.

13. CHECK 50 Ω DEFLECTION FACTOR ACCURACY, ±2%, CH 1 and CH 2

a. Use the 50 Ω Amplitude Calibrator square wave as the signal source. Use 6 division display except at 0.5 V/div and above, where 2 V signal must be used.

b. Adjust GAIN for zero error in 20 mV/div position.

c. Check for ±2% deflection factor accuracy of all VOLTS/DIV positions.

14. CHECK 1 MΩ DEFLECTION FACTOR ACCURACY, ±2%, CH 1 and CH 2

a. Use the Standard Amplitude Calibrator square wave as the signal source. Use 4 or 5 division display.

b. Adjust GAIN for zero error in 20 mV/div position.

c. Check for ±2% deflection factor accuracy of all VOLTS/DIV positions.

15. CHECK COMMON MODE REJECTION, 50 Ω and 1 MΩ

a. Connect the Type 191 Signal Generator to CH 1 and CH 2 thru the 10X attenuator and dual BNC input cable (TEKTRONIX Part No. 067-0525-00).

b. CH 1 and CH 2 inputs 50 Ω, DC; VOLTS/DIV to 20 mV; VERT MODE to CH 1. Apply 8 divisions of 50 kHz signal.

c. Set VERT MODE to ADD; CH 2 INVERTED. Push to release CH 2 VARIABLE GAIN and adjust for minimum deflection.

d. Set Type 191 Signal Generator to 50 MHz and check for 0.8 div or less of vertical deflection.

e. Change generator to 50 kHz, and inputs to 1 MΩ. Add 50 Ω BNC terminations at inputs.

f. Readjust CH 2 VARIABLE GAIN for minimum deflection.

g. Change generator to 50 MHz and check for 0.8 div or less of vertical deflection.

h. Push CH 2 VARIABLE GAIN to CAL.

16. CHECK BANDWIDTH 50 Ω and 1 MΩ, CH 1 and CH 2

a. Use 6 div of 3 MHz from the High-Frequency Constant-Amplitude Sine-Wave Generator (TEKTRONIX Part No. 067-0532-01) as reference.

b. Check for a minimum of 4.2 divisions of signal at 350 MHz in the 50 Ω input mode. (4.2 divisions at 300 MHz +35°C to +55°C.)

c. Select the 1 MΩ impedance; terminate the Sine-Wave Generator into the GR 50 Ω thru-line termination.

d. Use 6 div of 3 MHz from the Sine-Wave Generator as reference.

e. Check for a minimum of 4.2 divisions of signal at 250 MHz. (4.2 divisions at 200 MHz +35°C to +55°C.)

17. CHECK TRIGGER SENSITIVITY A and B

a. Check in AC, LF REJ, and DC with source switch in INT, that triggering occurs on 0.3 div of 3 MHz, 0.3 div of 50 MHz and 1.5 div of 350 MHz.

http://manoman.sqhill.com

b. Set SOURCE switch to EXT; signal applied to vertical input and EXT TRIG.

c. Check that the instrument triggers on 20 mV of 50 MHz and 100 mV of 350 MHz signal.

18. CHECK SINGLE SWEEP

a. Trigger on 0.5 div of 50 MHz.

b. Remove signal and go to SINGLE SWEEP.

c. READY lamp should light.

d. Apply signal; one sweep should occur and READY lamp should go off.

e. Remove signal and reset. The READY lamp should light.

19. CHECK X-Y PHASING

a. Connect CH 1 and CH 2 to Type 191 Signal Generator by the dual BNC input cable connector. Set CH 1 to 50 mV and CH 2 VOLTS/DIV to 20 mV/div, VERT MODE to X-Y, and ground CH 1 input.

b. Apply 10 div of 50 kHz.

c. Set CH 1 input to DC.

d. Switch Type 191 Signal Generator to 4 MHz.

e. Check for less than 0.52 div of vertical opening at center of lissajous figure (3%).

20. CHECK X-Y BANDWIDTH

a. GND CH 1, then apply 6 div of 50 kHz to CH 2.

b. Check for at least 4.2 div at 4 MHz.

21. CHECK CALIBRATOR AMPLITUDE

a. Set CH 1 VOLTS/DIV to 1 V; CH 1 input to 1 MΩ; apply 5 V of Amplitude Calibrator and Comparator signal to CH 1; adjust CH 1 VARIABLE volts/div for 5 divisions of deflection. Use separate 1 MΩ test oscilloscope for 485-2.

b. Connect CAL 5 V to CH 1 input.

c. Check for 5 divisions of signal ±0.025 div (0.5%). (Outside +15°C to +35°C range check for 0.05 div 1%.)

d. Set input impedance to 50 Ω; apply 0.6 V from 50 Ω Amplitude Calibrator. Set VOLTS/DIV to 0.1 V; adjust VARIABLE for 6 divisions of deflection: Connect CAL 5 V to CH 1 input.

e. Check for 5 divisions of signal, ±0.05 div (1.0%). (Outside +15°C to +35°C range check for 0.25 div 1.5%.)

22. CHECK CALIBRATOR FREQUENCY (+15°C to +35°C, 0.25%; −15°C to +55°C, 0.5%)

a. Set TIME/DIV to 0.2 ms/div; INT TRIG to CH 1; VERT MODE to ALT.

b. Apply 1 ms markers from the Time-Mark Generator to CH 1 50 Ω input; connect CAL FREQ 1 kHz to CH 2 50 Ω input.

c. Set VOLTS/DIV to obtain about 2 div of signal, for CH 1 and CH 2.

d. Trigger display (markers).

e. Check for less than 2.5 cycles (10 div) of drift in one second. (Outside +15°C to +35°C range check for same drift in one-half second.)

f. Set TIME/DIV to 1 ms/div; INT TRIG to NORM; CAL FREQ to 1 MHz; change markers to 1 μs.

g. Trigger at top of waveform from the CW end of trigger LEVEL. Use A TRIGGER HOLDOFF to obtain display showing the beat frequency.

h. Check for beat period greater than 400 μs. (Outside +15°C to +35°C range check for beat period greater than 200 μs.)

23. CHECK CALIBRATOR 1 kHz DUTY CYCLE (49.8 to 50.2%)

a. Connect 1 kHz of CAL 5 V to CH 1 input. CH 1 inpedance to 50 Ω; CH 1 VOLTS/DIV to 0.1 V; INT TRIG to NORM; A TIME/DIV to 0.1 ms; B TIME/DIV to 1 μs;

http://manoman.sqhill.com

HORIZ DISPLAY to INTEN; B TRIGGER SOURCE to B RUNS AFTER DELAY TIME.

b. Trigger A on + SLOPE. Use DELAY TIME POSITION control to position the intensified portion of the negative step near center screen.

c. Switch HORIZ DISPLAY to B and position the negative step to center screen.

d. Switch A SLOPE polarity and check that the transition changes less than 3 divisions horizontally.

24. CHECK DELAY JITTER

a. Set A TIME/DIV to 1 ms; B trigger source to B RUNS AFTER DELAY TIME. Set B TIME/DIV to 1 μs and Time-Mark generator to 1 ms. Set HORIZ DISPLAY to ALT; use A trigger LEVEL to obtain a stable display.

b. Set HORIZ DISPLAY to B. Rotate DELAY TIME POSITION dial from 1 to 9, checking for 0.5 div of jitter or less on B display.

25. CHECK INPUT PROTECTION TRIP LEVELS for CH 1 and CH 2

a. Set Type 106 High Amplitude control to minimum; Frequency to 1 kHz and Symmetry for 50% duty cycle. Set CH 1 and CH 2 inputs to DC; VOLTS/DIV to 2 V; position trace to top graticule line; input impedance to 50 Ω.

b. Connect Type 106 High Amplitude to CH 1 input; slowly increase Type 106 amplitude.

c. Check that the input disconnects (trace returns to top graticule line) and reset lamp lights after the trace crosses the 2.8 graticule division point and before it reaches the 4.25 division point. Return Type 106 amplitude to minimum and repeat for CH 2.

PART 2 — 485 CALIBRATION PROCEDURE

Remove the wrap-around cover as described in the Maintenance Section.

Connect the 485 to a power source which meets specified voltage and frequency requirements. Press the POWER pushbutton to turn the 485 on and allow it to warmup for at least 20 minutes before commencing Part 2 Calibration procedure. This instrument should be adjusted at an ambient temperature of +25°C (±5°C) for best overall accuracy.

Preliminary Control Settings

CONTROL	
INTENSITY	CCW
B INTENSITY	CCW
SCALE ILLUM	CCW
BW LIMIT	OFF
CH 1 and CH 2	
VOLTS/DIV	0.1 V
VARIABLE	CAL
INPUT	GND
POSITION	MIDR
1 MΩ/50 Ω	50 Ω
VERT MODE	CH 1
INT TRIG	NORM
CH 2 POLARITY	+ UP
SWEEP MODE	NORM TRIG
A and B TRIGGER	
COUPLING	AC
LEVEL	MIDR
SLOPE	+
A TRIGGER SOURCE	INT
B TRIGGER SOURCE	B RUNS AFTER DELAY TIME
POSITION (HORIZ)	MIDR
HORIZ DISPLAY	A
TRACE SEPARATION	MIDR
CAL 5 V FREQ	1 MHz
TIME/DIV	1 ms
DELAY TIME POSITION	4.00

1. CHECK +59.4 V SUPPLY (±0.06 V)

a. Using DVM measure at +59.4 V test point on Power Supply board.

b. If necessary adjust +59.4 (R1940).

c. INTERACTION will affect the operation of most circuits in the 485.

2. CHECK +50 V SUPPLY (±0.05 V)

a. Measure at +50 V test point on Power Supply board.

b. If necessary adjust +50 V (R2048).

c. INTERACTION will affect the operation of most circuits in the 485.

3. CHECK LOW VOLTAGE SUPPLIES (Use Ground Reference Test Point on Power Supply Board)

5 V ±0.1 V	−9 V ±0.15 V
+15 V ±0.25 V	+9 V ±0.15 V
−5 V ±0.1 V	+25 V ±0.6 V
−15 V ±0.3 V	+120 V ±2.4 V
−5.5 V ±0.25 V	+180 V ±3.6 V
+5.5 V ±0.25 V	

http://manoman.sqhill.com

4. CHECK CALIBRATOR AMPLITUDE

a. Remove Q2114 located on Sweep board near Calibrator output.

b. Using DVM measure voltage at CAL 5 V output on front panel. Record the voltage.

c. Remove Q2124.

d. Check that CAL 5 V output is 5 V more positive (±5 mV) than the voltage recorded in step b.

e. If necessary adjust CAL 5 V (R2130).

f. Replace Q2114 and Q2124.

5. ADJUST CALIBRATOR FREQUENCY

a. Set TIME/DIV to 0.2 ms; INT TRIG to CH 1; VERT MODE to ADD.

b. Apply 1 ms markers from the Time-Mark Generator to CH 1 50 Ω input; connect CAL 5 V, FREQ 1 kHz to CH 2.

c. Set VOLTS/DIV to obtain about 2 div of signal.

d. Trigger display (markers).

e. Adjust 1 kHz (R2105) for less than 0.5 cycles (2.5 div) of square wave (calibrator) drift in 1 second. (0.5 Hz/1 kHz = 0.0005 or 0.05%).

f. Set TIME/DIV to 2 ms; INT TRIG to NORM; coupling to DC; CAL 5 V frequency to 1 MHz; Time-Mark Generator to 1 μs; VERT MODE to ADD.

g. Trigger at top of waveform from the CW end of trigger LEVEL. Use A TRIGGER HOLDOFF to obtain display showing the beat frequency.

h. Adjust 1 MHz (R2100) for beat period greater than 2 ms. (0.5 kHz/1 MHz = 0.0005 or 0.05%.)

6. CHECK CALIBRATOR 1 kHz DUTY CYCLE (49.8 to 50.2%)

a. Connect 1 kHz of CAL 5 V to CH 1 input; CH 1 impedance to 50 Ω; CH 1 VOLTS/DIV to 0.1 V; INT TRIG to NORM; A TIME/DIV to 0.1 ms; B TIME/DIV to 1 μs; HORIZ DISPLAY to INTEN; B TRIGGER SOURCE to B RUNS AFTER DELAY TIME.

b. Trigger A on + SLOPE; use DELAY TIME POSITION control to position the intensified portion of the negative step near center screen.

c. Switch HORIZ DISPLAY to B and position the negative step to center screen.

d. Switch A SLOPE polarity and check that the transition changes less than 3 divisions horizontally.

7. CHECK CATHODE REGULATOR +95 V (±8 V)

a. Set INTENSITY controls CCW.

b. Measure at CATH REG test point on rear of Horizontal Amp board.

c. If necessary adjust R1625 located next to CATH REG test point.

8. CHECK −3000 V for ±50 V; or ±500 V With VOM Accurate to 2% (this voltage is marked −2950 in some instruments)

a. Make this measurement using the precision divider in conjunction with the precision DC voltmeter, or use high voltage scale of 2% VOM.

b. Measure through hole in plastic cover at rear of Horizontal Amp board.

c. This voltage should be within the −2950 to −3050 V range because of correct adjustments performed in steps 1, 2, and 7.

9. CHECK COMPENSATION PLATE VOLTAGE

NOTE

Adjustments and test points are accessible from the top of the instrument.

http://manoman.sqhill.com

a. Set SWEEP MODE to AUTO TRIG.

b. With vertical POSITION control center the trace.

c. With DVM measure the two vertical deflection plate voltages at the CRT neck pins fed from the output of U660. (May need 1 kΩ resistor in series with the test leads to prevent vertical oscillations.)

d. Calculate the average of two voltages.

e. Connect DVM to COMP PL test point located next to the COMP PL potentiometer at rear of Horizontal Amp board.

f. Check for the calculated voltage, ±0.3 V.

g. If necessary adjust COMP PL (R1796).

10. ADJUST GRID BIAS

a. With low intensity level, set VERT MODE to X-Y.

b. Adjust FOCUS and ASTIG (rear panel) for optimum spot size.

c. Set INTENSITY and B INTENSITY CCW.

d. Connect DVM to Z OUT DC test point (at rear of Power Supply board) and note the DC voltage (normally in the +7 to +11 V range).

e. With the INTENSITY control, increase the DVM reading by 4 V.

f. Adjust GRID (R1660), located at rear of Horizontal Amp board, so that the CRT spot is at the threshold of visibility in low ambient light.

11. CHECK Z AXIS COMPENSATION and RISETIME

NOTE

Adjustments and test points are located at the rear of the Power Supply board.

a. Set TIME/DIV to 0.1 μs; HORIZ DISPLAY to A, and VERT MODE to CH 1 (make sure SWEEP MODE is in AUTO TRIGGER).

b. Set test oscilloscope to 0.05 μs/div and 0.1 volt/div.

c. Connect 10X probe (1 V/div at probe tip) to Z OUT HF test point.

d. Adjust INTENSITY for 4 div of signal.

e. Check aberrations for 2% or less.

f. If necessary adjust Z COMP (C1762, C1765, and R1865).

g. Check Z AXIS RISETIME for 15 ns or less.

12. CHECK EXT Z AXIS BLANKING

a. Apply 0.2 V P-P of 20 MHz from Type 191 Signal Generator to EXT Z AXIS blanking (rear panel) and A EXT TRIG.

b. Adjust trigger LEVEL for TRIG'D LIGHT.

c. At normal intensity check for intensity modulation.

d. Change Type 191 to 2 V P-P and 2 MHz to EXT Z AXIS blanking and A EXT TRIG; set TIME/DIV to 0.5 μs.

e. Turn INTENSITY up and check for intensity modulation.

13. CHECK AUTO FOCUS

NOTE

Adjustments and test points are located at the rear of the Power Supply board.

a. Apply 2 div amplitude of 3 MHz to CH 1 input.

b. Trigger CH 1, set TIME/DIV to 0.2 μs/div, HORIZ DISPLAY to A.

c. With low intensity adjust the FOCUS and ASTIG (rear panel) for the best defined 3 MHz trace.

http://manoman.sqhill.com

d. Set A TRIGGER HOLDOFF to max; test oscilloscope to 1 V/div (10 V/div at probe tip) and connect 10X test probe to Z OUT DC test point.

e. Set INTENSITY for 50 V step.

f. Connect the DVM to the AUTO FOC test point. Measure and record the DC voltage.

g. Observe the 485 display and adjust FOC GAIN (R1710) for optimum focus. If the original setting cannot be improved, reset FOC GAIN to the voltage recorded in step f and continue to step 13.

h. If focus was improved by adjusting FOC GAIN, preset MAX Z (R1560) CW and MAX FOC (R1700) CW.

i. Set A TRIGGER HOLDOFF to NORM.

j. Set FOCUS and ASTIG for optimum focus at low display intensity.

k. Set A TRIGGER HOLDOFF to max and adjust INTENSITY for a 70 V step at Z OUT DC test point.

l. Adjust FOC GAIN for best focus.

m. Record the new DC voltage at the AUTO FOC test point.

n. Turn INTENSITY to max and adjust MAX Z (R1560) for a 72 V step on the test oscilloscope.

o. Set MAX FOC for the voltage recorded in step 12m.

p. Set A TRIGGER HOLDOFF to NORM.

14. CHECK OUTPUT WAVEFORMS (With Sweeps Running at 1 ms/div)

a. With test oscilloscope check the following outputs (located on the rear panel).

b. A and B GATES, approximate amplitude 4 V; 0.5 V into 50 Ω.

c. A SAWTOOTH, approximate amplitude 10 V; 0.5 V into 50 Ω.

15. ADJUST TRACE ROTATION

a. Position trace to graticule center.

b. Adjust TRACE ROTATION (rear panel) so trace parallels center graticule line.

16. ADJUST Y AXIS ALIGNMENT

a. Apply 1 ms and 0.1 ms markers of full screen amplitude to CH 1.

b. Set TIME/DIV to 1 ms.

c. Adjust A VARIABLE TIME/DIV for two markers per div.

d. Adjust Y AXIS (R1794), located towards rear of B Trigger board, for vertical alignment at the graticule center.

17. ADJUST GEOMETRY

Adjust GEOM, (R1792), located towards rear of B Trigger board, for least bowing of the vertical lines at the graticule edges.

18. ADJUST HORIZONTAL GAIN

a. Set HORIZ DISPLAY to B; TIME/DIV to 0.1 ms/div, A VARIABLE TIME/DIV to CAL.

b. Apply 0.1 ms markers.

c. Use POSITION (HORIZ) control to keep markers aligned with graticule lines.

d. Adjust H GAIN (R1366), upper rear of Sweep board, for one marker/div and for exact alignment of markers at 1 and 9 (center 8 divisions).

19. ADJUST A SWEEP CAL

a. Set HORIZ DISPLAY to A.

b. Use POSITION (HORIZ) control to keep markers aligned with graticule lines.

http://manoman.sqhill.com

c. Adjust A CAL (R1308), located near center rear of Sweep board, for one marker/div and for exact alignment of markers at 1 and 9 (center 8 divisions).

20. CHECK A VARIABLE TIME/DIV

a. Set Time-Mark Generator to 1 ms markers; TIME ON to 0.1 ms.

b. Push and release VARIABLE TIME/DIV to CCW end.

c. Check for 4 divisions or less between markers.

d. Push VARIABLE TIME/DIV into CAL.

21. ADJUST B REGISTER

a. Set HORIZ DISPLAY to ALT; B TRIGGERING SOURCE to INT; DELAY TIME POSITION (DTP) to 0.

b. Trigger A and B sweeps on the 0.1 ms markers.

c. Adjust B REGIS (R1325), located next to the B REGIS test point on Sweep board, for coincidence of the markers at the beginning of the A and B sweeps.

22. CHECK HORIZONTAL CENTERING

a. Set HORIZ DISPLAY to A.

b. While rotating POSITION (HORIZ) control to extremes, observe both ends of the sweep cross the graticule center line.

c. If necessary adjust HORIZ CENT (R1150), located on the center of the B Trigger board.

23. CHECK A SWEEP LENGTH

Greater than 10 but less than 11.5 divisions.

24. ADJUST DELAY START and DELAY STOP (Located on Sweep Board)

a. Set A TIME/DIV to 0.1 ms; B TIME/DIV to 1 μs; HORIZ DISPLAY to ALT; DELAY TIME POSITION (DTP) dial to exactly 1.0; B SOURCE to RUNS AFTER DELAY TIME; Trigger A on the + SLOPE of the 0.1 ms time mark.

b. Adjust DELAY START (R918) to get intensified portion on the second time mark and the pulse on B trace to just start positive at the front of B trace.

c. Set the DTP dial to exactly 9.0.

d. Adjust DELAY STOP (R925) for the intensified portion on the tenth time mark and the pulse on B trace to just start positive at the front of B trace.

e. Repeat steps b through d for indentical B displays at the two DTP dial settings.

25. CHECK 0.1 ms DELAY LINEARITY

a. Same setup as in step 24, except change time marks to 50 μs.

b. Turn DTP dial fully CCW. The first marker should be displayed on B display.

c. Set DTP dial to exactly 0.95. A marker should be near the middle of B display. Adjust POSITION (HORIZ) to put B display at midscreen reference position.

d. Set DTP dial to exactly 8.95. The marker should be within 0.2 div of being at the same midscreen reference. If necessary make a slight readjustment of DELAY STOP to get the screen position for a DTP dial reading of 8.95 to agree with that for a DTP dial reading 0.95. Note that in this setup one minor DTP dial division corresponds to one screen division, and these procedures require careful settings for repeat reading.

e. Set the DTP dial to settings of exactly 0.45, 0.95, 1.45, 1.95, 2.45, through to 9.45. At each setting observe the marker position on the B display, noting the maximum + and − excursions from the center screen reference position. The total excursion from most negative to most positive, should not exceed 1.4 screen divisions (1 div spec plus ±0.2 div for operator setting of the dial).

26. ADJUST 0.1 μs TIMING, A and B

a. Set A TIME/DIV to 0.1 μs; B TIME/DIV to 10 ns; HORIZ DISPLAY to ALT; apply 0.1 μs markers.

b. Set the DTP to 1.00 and align the marker to a reference point, then turn the DTP to 9.00 and adjust C882, (behind relay on A Sweep) for zero error at the reference point.

http://manoman.sqhill.com

c. Set B TIME/DIV to 0.1 μs, and set DTP to approximately 0.00 to align the beginning of the A and B sweeps.

d. Adjust C1248 (above the relay in B Sweep) so that B Sweep matches A Sweep timing on screen.

27. ADJUST 1 μs TIMING A and B, CHECK 1 μs DELAY LINEARITY

a. Set A and B TIME/DIV to 1 μs and 0.1 μs; time marks to 1 μs; HORIZ DISPLAY to ALT.

b. Trigger A on the + SLOPE of the time marks.

c. Set the DTP dial to exactly 0.95. With the POSITION (HORIZ), set the leading edge of the B display to a reference position while keeping the first 10 markers of A display on the screen. The intensified zone of A must start on the second time mark.

d. Set the DTP to exactly 8.95.

e. Adjust C877 (located in front of the relay on the lower half of the Sweep board) to move the B display to the reference position of step b. The intensified zone of A must start on the tenth time mark.

f. Repeat steps b through e for identical B display at the two DTP dial settings.

g. Check the delay linearity by setting dial to exactly 4.95. The marker on the B display must be within 0.15 div of the reference position.

h. Set B TIME/DIV to 1 μs; HORIZ DISPLAY to B and the DTP dial to 0.00.

i. Adjust C1242 (located below the relay on the upper half of the Sweep board) for one time mark per division and for exactly 1 to 9 timing (center 8 divisions).

28. ADJUST A SWEEP LINEARITY (R863)

a. Set the 485 for a 20 ns/div AUTO TRIG Sweep with the A TRIGGER HOLDOFF at max (but not B ENDS A).

b. Connect the 485 A GATE (rear panel) to the Ext Trigger Input of the test oscilloscope using a 50 Ω termination at the test oscilloscope. Also, set the test oscilloscope to 20 ns/div and trigger it on the + SLOPE of the 485 A GATE.

c. Connect the test oscilloscope 10X probe (10 MΩ) to the IN test point located near the center of the Sweep board. Make the probe ground connection at one of the GND test points on the Sweep board. Set test oscilloscope Volts/Div for a probe tip deflection factor of 50 mV/div.

d. This display of the A sweep generator input, consists of a positive step having overshoot followed by a positive-going linear ramp.

e. Adjust R863, (located below and in front of the lower relay on the Sweep board) to extend the ramp at the right of the display as linearly as possible back towards the step at the left. Ringing should be minimized, except for one overshoot cycle at the step.

f. Switch the 485 to 10 ns; the step and ramp amplitudes will increase. Make further adjustment if necessary to optimize the "linear ramp" on the two sweep speeds (10 ns/div and 20 ns/div).

29. ADJUST 5 ns TIMING

a. Connect 5 ns time markers from H.F. Selector Output to CH 1 input; connect 50 ns time marks to EXT TRIG INPUT; A TRIG SOURCE to EXT; A TIME/DIV to 5 ns; then center trace (If using a 2901 Time Mark Generator, set Trigger Out for 0.1 μs).

b. Adjust C1190, (located between Q1168 and Q1172 on B Trigger board) for one time mark per division and for exactly 1 to 9 timing (center 8 divisions).

30. ADJUST 2 ns LINEARITY and TIMING

a. Set A TIME/DIV to 2 ns; select 2 ns time marks from the Time-Mark Generator.

b. With the POSITION (HORIZ) control keep the peak of one time mark positioned to center screen. Adjust C1364, (located in front of H GAIN pot on Sweep board) for most symmetrical timing (best linearity) of the sweep over the center 8 graticule divisions.

c. Adjust R1226, (located above the relay on the lower half of the Sweep board) for one time mark per division and for exactly 1 to 9 timing (center 8 divisions).

http://manoman.sqhill.com

d. INTERACTION with 5 ns timing, repeat steps 26 and 27 if necessary.

31. ADJUST 1 ns TIMING

a. Set TIME/DIV to 1 ns.

b. Adjust 1 ns (R1228), (located in back of the lower relay on the Sweep board) for exactly 1 to 9 timing (four 2 ns markers over the center 8 divisions).

c. If exact timing cannot be achieved, a compromise adjustment may be done.

32. CHECK 1, 2, and 5 ns SWEEP LINEARITY

a. Less than 0.1 division of error with timing adjusted on (1 ns through 20 ns). With time marks exactly aligned at 1 and 9 the remaining marks must be no greater than 0.1 div away from their respective graticule lines. The incremental error must not exceed 0.1 div over any one division.

33. CHECK B SWEEP TIMING ACCURACY

a. Check timing over center 8 graticule divisions; position one time mark to 1 and read error at 9.

b. 1 ns to 20 ns;—within 0.16 div (2%).

c. 50 ns to 0.1 s;—within 0.1 div (1.25%).

d. 0.2 s to 0.5 s;—within 0.16 div (2%).

34. CHECK A SWEEP TIMING ACCURACY

a. 1 ns to 20 ns;—within 0.16 div (2%).

b. 50 ns to 0.1 s;—within 0.1 div (1.25%).

c. 0.2 s to 0.5 s;—within 0.16 div (2%).

35. CHECK AUTO REPETITION RATE

a. Set A TIME/DIV to 50 μs; SWEEP MODE to AUTO TRIG.

b. Check that sweep triggers on 50 ms markers and will not trigger on 0.1 s markers.

36. CHECK DELAY TIME ACCURACY, 10 ns/div to 0.5 s/div

a. Use time marks that give 1 to 5 markers/div on the A display. Use B TIME/DIV for 1 ns for A TIME/DIV settings of 10 ns through 0.1 μs. For A TIME/DIV setting of 0.2 μs and slower maintain an A:B ratio of 100:1.

b. Set the DTP dial exactly to the reference position (1.0 except at the fastest speeds). Use the POSITION (HORIZ) control to move the marker on the B display to a reference position.

c. Rotate the DTP to 9.0 and then slightly from 9.0 to place the B display marker to the same screen reference position. Read the error (from 9.00) in the minor dial divisions on the DTP dial.

TABLE 5-4

A Time/Div	Reference DTP Position	Maximum DTP Dial Error at Setting near 9.0 (minor divisions)
10 ns	4.0	6
20 ns	2.0	7
50 ns to 1 ms	1.0	4
2 ms to 0.5 s	1.0	8

37. CHECK INCREMENTAL DELAY ACCURACY 10, 20, and 50 ns/div

NOTE

Check the error at each turn against the requirements given in the chart at the end of this step. Detailed procedure is given for the 10 ns/div.

a. A and B TIME/DIV of 10 ns and 1 ns; HORIZ DISPLAY to B; A TRIGGER HOLDOFF to NORM; time marks of 10 ns.

b. Set the DTP dial to exactly 4.0. Adjust the POSITION (HORIZ) for marker leading edge at midscreen. Turn the DTP dial CW one turn at a time and bring a marker to the exact midscreen position.

c. Check that the dial errors at 5.0, 6.0, and 7.0 are within the allowable limits (at 10 ns/div the change in error over any one turn is not to exceed 2 minor dial divisions, and the total error at any turn is not to exceed 3 minor dial divisions).

http://manoman.sqhill.com

d. Set the DTP dial to exactly 6.0. Adjust the POSITION (HORIZ) for marker leading edge at midscreen. Turn the DTP dial CW one turn at a time and bring a marker to the exact midscreen position. Check that the dial errors at 7.0, 8.0, and 9.0 are within the allowable limits.

e. Use the same procedure to check the 20 ns and 50 ns ranges.

TABLE 5-5

Time/ Div	Dial Setting		Max Error in Minor DTP Dial Div	
	Reference	Read Errors At	Change Over Any 1 Turn	Total at Any Turn
10 ns	4.0	5, 6, and 7	2	3
1 ns	6.0	7, 8, and 9	2	3
20 ns	2.0	3, 4, 5, and 6	2	4
1 ns	5.0	6, 7, 8, and 9	2	4
50 ns	1.0	2, 3, 4, and 5	1	2
1 ns	5.0	6, 7, 8, and 9	1	2

38. CHECK DELAY JITTER

a. Set A TIME/DIV to 1 ms; B trigger SOURCE to B RUNS AFTER DELAY TIME; B TIME/DIV to 1 μs; set Time-Mark Generator to 1 ms markers; set HORIZ DISPLAY to ALT; use A trigger LEVEL to obtain a stable display.

b. Set HORIZ DISPLAY to B; rotate DELAY TIME POSITION from 1 to 9; check for 0.5 div or less of jitter on B display.

39. CHECK B ENDS A OPERATION

a. HORIZ DISPLAY to INTEN; A TIME/DIV to 1 ms; B TIME/DIV to 0.1 ms; A TRIGGER HOLDOFF to B ENDS A.

b. Rotate DTP; check that sweep ends after the intensified zone.

40. CHECK CH 1 LIGHT EMITTING DIODES (LED'S)

a. Check that the probe lights the corresponding LED, e.g., X10 probe lights X10 LED.

b. Check that CH 2 LED'S are off with VERT MODE in CH 1.

c. Check that CH 1 LED'S are on in CH 1, ALT, CHOP, ADD, and X-Y.

d. If probes are not available: an 11 kΩ resistor to ground from the code ring (around each input BNC)light the X10 LED, a 6.8 kΩ resistor lights X100 LED, and a short circuit causes trace ident.

41. CHECK CH 2 LED'S

a. Check that the probe lights the corresponding LED.

b. Check that CH 1 LED's are off with VERT MODE in CH 2.

c. Check CH 2 LED's are on in CH 2, ALT, CHOP, ADD, and X-Y.

42. CHECK TRACE IDENT FUNCTION CH 1 and CH 2

Check TRACE IDENT function on probe shifts trace approximately 0.2 div up, and turns off the LED for that channel.

43. CHECK INPUT LIGHTS CH 1 and CH 2

a. Check that 50 Ω is lit when 50 Ω/1 MΩ pushbutton is out.

b. Check that 1 MΩ is lit when 50 Ω/1 MΩ pushbutton is in.

44. CHECK INPUT PROTECTION TRIP LEVELS for CH 1 and CH 2

a. Set the Type 106 High Amplitude control to minimum, Frequency to 1 kHz, and Symmetry for 50% duty cycle. Set the 485 CH 1 and CH 2 inputs to DC; VOLTS/DIV to 2 V; Position trace to top graticule line; set input impedance selector to 50 Ω (button out).

b. Connect Type 106 High Amplitude to CH 1 input; slowly increase Type 106 amplitude.

c. Check that the input disconnects (trace returns to top graticule line) and reset lamp lights after the trace crosses the 2.8 graticule division point and before it crosses the 4.25 division point. Return Type 106 Amplitude Control to minimum and repeat for CH 2.

http://manoman.sqhill.com

45. CHECK PROBE POWER

NOTE

Measure voltages at the respective pins. See Fig. 5-1.

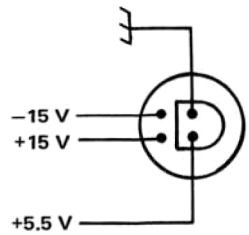

Fig. 5-1. Probe Power Voltages.

46. ADJUST MAIN VERTICAL BALANCE (ADD SHIFT)

a. Set VERT MODE to CHOP; position CH 1 and CH 2 trace to graticule center.

b. Push ADD and observe trace position (if less than 0.2 div away from center, proceed to step 47).

c. Push CHOP and adjust MAIN VERT BAL (R600), (located at the lower rear of Vertical board) for same trace position.

d. Position CH 1 and CH 2 trace to graticule center.

e. Push ADD and check for less than 0.2 div shift.

47. CHECK MAIN VERTICAL GAIN

a. Position CH 2 trace to graticule center.

b. Connect DVM to test points at output of CH 1 channel switch (test points 418 and 419) and observe reading (must not exceed 15 mV).

c. Set CH 2 POSITION control for a reading of 200 mV greater than the reading in step b.

d. Adjust Main Vert Gain (R629) (located on upper rear of Vertical board) for 4 div of deflection from graticule center line.

48. CHECK VERTICAL LINEARITY

a. With CH 2 POSITION control move trace to opposite edge of graticule.

b. Check the DVM reading should be within ±10 mV of being 200 mV away from the reading in 47b.

49. ADJUST 50 Ω INPUT IMPEDANCE CH 1 and CH 2

a. Set input to 50 Ω; VOLTS/DIV to 50 mV; VERT MODE to CH 1; position trace to center graticule line.

b. Set DVM to correct ohms scale and connect to CH 1 input. Note the amount of trace shift caused by the meter current. If the trace has shifted over 2 div (100 mV) the measurement will be invalid, and a lower current ohmmeter must be used.

c. Set VOLT/DIV to 10 mV.

d. Short ohmmeter leads together and record first reading.

e. Connect ohmmeter to CH 1 input and record second reading. Reverse the leads of the ohmmeter and record the third reading.

f. Input resistance is the average of readings two and three minus the first reading. Note: the first reading is the residual resistance in the ohmmeter leads. The second and third readings are averaged to cancel the effects of any offset current in the 485.

g. This calculated value of Input R must be within 49.75 to 50.25 Ω.

h. If necessary adjust Input R, R208 CH 1 R308 CH 2, (located at front of Vertical board) for 50 Ω calculated.

i. Repeat procedure for CH 2.

50. ADJUST 50 Ω INPUT OFFSET CURRENT CH 1 and CH 2

a. Set inputs to GND; VOLTS/DIV to 10 mV.

b. Switch input to DC then back to GND.

http://manoman.sqhill.com

c. Adjust Input I (R206) for CH 1 and Input I (R306) for CH 2, (located on front of Vertical board) for no trace shift.

51. ADJUST VARIABLE BALANCE CH 1 and CH 2

a. Set VOLTS/DIV to 10 mV; input to GND.

b. Rotate VARIABLE volts/div fully CCW. Adjust VAR BAL (R215), (located on front of Vertical board) for less than 0.1 div of shift while switching from Uncal to calibrated.

c. Check for 0.2 div or less of shift while rotating VARIABLE CW to CCW.

d. Repeat in CH 2 adjusting NVB (R312) (located on front of Vertical board).

e. Change CH 2 POLARITY to INVERT and repeat in CH 2 adjusting INVB (R310) (located on front of Vertical board).

52. ADJUST 5 mV/DIV BALANCE CH 1 and CH 2

a. Set input to GND; POLARITY + UP; 10 mV/div.

b. Adjust R350, (located above U350) for no shift when switching in CH 2 between 10 and 5 mV.

c. Recheck CH 2 variable balance.

d. Repeat in CH 1 adjusting R250 (located above U250).

53. CHECK INVERT SHIFT

a. Set VARIABLE volts/div to cal; VOLTS/DIV to 5 mV; CH 2 to 50 Ω; VERT MODE to CH 2; then center trace.

b. Switch CH 2 POLARITY between + UP and INVERT.

c. Check for ±1.0 div of trace shift or less.

54. CHECK BEAM FINDER

a. Check that trace remains within the graticule area with BEAM FINDER depressed.

b. Check beam finder operation under all combinations of HORIZONTAL, CH 1, and CH 2 POSITION controls.

55. ADJUST LOW FREQUENCY VERTICAL TRANSIENT RESPONSE

a. These adjustment (part of MAIN VERT TRANS RESP) are located at the rear of the Vertical board. They are the first four pots above the MAIN VERT BAL adjustment, and are adjusted beginning with the bottom one first.

b. Input to 50 Ω; DC coupled. Connect the High Amplitude Output of the Type 106 Square-Wave Generator to CH 1 input.

c. Use a VOLTS/DIV setting of 0.5 V with the Type 106, and an on-screen amplitude of 5 to 6 divisions. Note that the maximum output of this generator will trip the 50 Ω RESET.

d. The adjustments are to be set for best flatness of the top front corner of the square wave.

TABLE 5-6

	TIME/DIV	SQUARE WAVE
Bottom Adjustment (R606)	5 ms	100 Hz
Next Adjustment (R607)	0.5 ms	1 kHz
Next Adjustment (R608)	20 μs	20 kHz
Next Adjustment (R609)	20 μs	20 kHz

c. Repeat step d as there may be interaction.

56. ADJUST CH 1 and CH 2 50 Ω GAIN

a. Located next to second stage IC's towards front of Vertical board.

b. Set VOLTS/DIV to 20 mV.

http://manoman.sqhill.com

c. Connect 120 mV from 50 Ω Amplitude Calibrator to CH 1 and CH 2.

d. Adjust front panel GAIN for mid-range.

e. Adjust CH 2 GAIN (R358) and CH 1 GAIN (R255) for 6 divisions of deflection.

f. On CH 1 check that the gain in 20 MHz limit is within ±1% of the full bandwidth gain.

57. ADJUST INVERT GAIN (Located Lower Front of Vertical Board)

a. Set POLARITY to INVERT.

b. Connect 120 mV from 50 Ω source to CH 2.

c. Adjust INV Gain (R318) for 6 divisions.

58. CHECK ADDED MODE GAIN

a. Connect 50 Ω Amplitude Calibrator to CH 1 and CH 2 using dual input cable, (067-0525-00); CH 1 and CH 2 DC coupled.

b. Adjust each channel for 4 div of deflection, with VARIABLE VOLTS/DIV.

c. Set POLARITY to + UP.

d. Switch VERT MODE to ADD.

e. Check for 8 div ±0.1 div.

f. Switch POLARITY to INVERT.

g. Check for <0.1 div deflection with CH 1 and CH 2 centered.

h. If any deflection was noted in step g, adjust CH 2 VARIABLE VOLTS/DIV for a null (single trace) on the 485 display (do not change this setting unless specified in the following steps).

59. ADJUST CH 1 TRIGGER GAIN (TRIG MODE in NORM)

a. Connect probe to test point (TP568), (located towards rear of Vertical board).

b. Adjust Trig GAIN, (located in middle of Vertical board), to null signal displayed on the test oscilloscope.

60. CHECK 50 Ω ATTENUATOR ACCURACY ±2%, CH 1 and CH 2

Check all 50 Ω attenuator positions with a 1 kHz square wave from 50 Ω Amplitude Calibrator.

61. ADJUST POSITION CENTER CH 1 and CH 2

a. CH 1 to 20 mV/div; DC coupled; apply 8 div of 50 kHz from the Type 191 Constant-Amplitude Signal Generator.

b. Switch to 10 mV/div and adjust POS CTR (R275) so the top and bottom are equal spacing from the graticule center, when POSITION control is rotated to both ends of its range.

c. Repeat for CH 2 adjusting POS CTR (R375).

62. ADJUST 50 Ω HIGH FREQUENCY TRANSIENT RESPONSE, CH 1 and CH 2

NOTE

These adjustments are the five remaining adjustments in the MAIN VERT TRANS RESP set, the slug-tuned coil near the output IC, and four adjustments by the input stages of each channel. Total aberrations after adjustment should be within 4% P-P.

a. Signal source is the TU-5, Tunnel Diode Pulser driven by the Type 106 Square-Wave Generator (Set 106 to 100 kHz). The test setup path from the Type 106 to the 485 is as follows:

Type 106 High Amplitude output, 50 Ω input of the cable

Tunnel Diode Pulser, 2X BNC attenuator, 50 Ω input of the 485.

Adjust the Pulser and the Type 106 so that the Pulser just triggers; do not overdrive. A 4 to 7 div step can be used (keep VOLTS/DIV VARIABLE to CAL). The Tunnel Diode Pulser is flat for only 150 ns, so don't use for adjustment of longer time constants.

http://manoman.sqhill.com

b. Adjust for best response.

Four of five upper adjustments in the MAIN VERT TRANS RESP set (all but C617 next to the IC).	R613 R614 R615	Adjust for best flat top response.
Slug-tuned coil near the output IC.	L654	Best flat top response.
CH 1 adjustments above U210.	C214 R214	Best front corner level.
CH 1 adjustments behind U210.	C240 R240	Fastest Risetime.
CH 2 adjustments above U310.	C315 R315	Best front corner level.
CH 2 adjustments behind U310.	C340 R340	Fastest Risetime.
Uppermost adjustment in the MAIN VERT TRANS RESP set.	C617	Minimum ringing and fastest risetime for CH 1 and CH 2.

NOTE

U510 and U530 may be raised part way out of their sockets to match the level of the first 3 ns to the remainder of the waveform for CH 1 and CH 2 transient response respectively.

63. ADJUST 1 MΩ DC BAL CH 1 and CH 2

NOTE

These adjustments are accessible at the bottom of the instrument.

a. Input to 50 Ω; VOLTS/DIV to 5 mV; VERT MODE to CH 1; input to GND.

b. Switch to 1 MΩ and adjust R45 for 0 shift between 50 Ω and 1 MΩ.

64. CHECK 1 MΩ GATE CURRENT CH 1 and CH 2

Switch from GND to DC in 5 mV; check for 0.2 div or less of shift.

65. ADJUST 1 MΩ AMPLIFIER GAIN CH 1 and CH 2

NOTE

Adjustments are labeled on the bottom shield of the attenuator compartments.

a. Set VOLTS/DIV to 20 mV.

b. Apply 100 mV from Amplitude Calibrator and Comparator, then adjust R78 for 5 div of deflection.

c. Check 50 Ω/1 MΩ gain match; ±1% in 20 mV/div.

66. ADJUST 1 MΩ 10 kHz TRANSIENT RESPONSE, CH 1 and CH 2

a. Connect Type 106 High Amplitude with 6 div of 10 kHz through 5X attenuator, GR cable, 50 Ω termination.

b. Adjust C46 and R53 for optimum response.

67. ADJUST 1 MΩ INPUT ATTENUATOR COMPENSATIONS, CH 1 and CH 2

a. Connect 5 div of 1 kHz from Type 106 High Amplitude, through 5X and 10X attenuators, a 50 ohm termination, and 20 pF standardizer. Volts/Div to 20 mV.

b. Adjust C12 for front corner level to match 50 Ω input level. (Remove 20 pF standardizer, then check 50 Ω input level with 50 Ω pushbutton depressed.)

c. Check 5, 10, and 50 mV.

d. Set VOLTS/DIV to 100 mV (knob setting .1V), remove the 5X attenuator, and adjust C24 and C26 for optimum response.

e. Check 200 and 500 mV.

f. Set VOLTS/DIV to 1 V (remove 10X attenautor and 50 Ω termination) and adjust C20 and C22 for optimum response.

g. Check 2 and 5 V.

http://manoman.sqhill.com

h. Check all attenuator positions without 20 pF standardizer.

68. ADJUST 1 MΩ AMPLIFIER HIGH FREQUENCY TRANSIENT RESPONSE

a. Set Type 106 to 100 kHz; TD Pulser 2X attenuator and 50 Ω termination. Set CH 1 and CH 2 VOLTS/DIV to 20 mV.

b. TIME/DIV to 20 ns/div; adjust C55 and R55 for optimum front corner, C70 for best level behind leading edge.

69. CHECK COMMON MODE REJECTION 50 Ω and 1 MΩ

a. Connect Type 191 Signal Generator to 50 Ω input CH 1 and CH 2 thru the 10X attenuator and dual BNC input cable (067-0525-00).

b. CH 1 and CH 2 inputs 50 Ω, DC; VOLTS/DIV to 20 mV; VERT MODE to CH 1. Apply 8 divisions of 50 kHz.

c. Set VERT MODE to ADD; CH 2 INVERTED. Push to release CH 2 VARIABLE GAIN and adjust for minimum deflection; position to center of graticule with CH 2 POSITION control.

d. Set Type 191 to 50 MHz and check for 0.8 div or less of vertical deflection.

e. Set generator to 50 kHz; inputs to 1 MΩ; add 50 Ω BNC terminations at inputs.

f. Readjust CH 2 GAIN for minimum deflection.

g. Set Type 191 to 50 MHz and check for 0.8 div or less of vertical deflection.

h. Push CH 2 VARIABLE GAIN to CAL.

70. CHECK BANDWIDTH 50 Ω and 1 MΩ, CH 1 and CH 2

NOTE

Use 6 div of 3 MHz from the High-Frequency Constant-Amplitude Signal Generator (067-0532-01) as reference.

a. Check for minimum of 4.4 div of signal at 350 MHz in the 50 Ω mode.

b. Check 5, 10, 20, 50 mV, and 0.1 V.

c. Check for minimum of 4.4 div of signal at 250 MHz in the 1 MΩ mode.

d. Check 5, 10, 20, 50 mV, and 0.1 V.

e. Repeat check for 1 V using 4 divisions as reference and 2.9 divisions the minimum deflection.

71. OPTIONAL — CHECK VSWR

NOTE

TEKTRONIX supplies this procedure for a 5000-hour, or as needed, verification of VSWR. Equipment: VSWR AUTOTESTER and Graticule; 561B/3A9/2B67; High-Frequency Constant-Amplitude Signal Generator (067-0532-01).

a. Ground 3A9 CH 2 input; connect VSWR Autotester, VSWR OUT to 3A9 CH 1 input; 3A9 to 20 μV/div; DC coupled; adjust 3A9 DC offset for VSWR = 1.00 on VSWR graticule.

b. Connect Signal Generator to VSWR Autotester RF IN through 10X and 5X attenuators. Set generator frequency to 100 MHz and adjust amplitude for VSWR = 1.22.

c. Disconnect the Signal Generator and recheck VSWR = 1.00.

d. Connect VSWR Autotester to 485 CH 1 input; set 485 input to 50 Ω, DC coupled.

e. Remove the 10X attenuator and reconnect the generator to VSWR Autotester RF IN.

f. Sweep the generator frequency from 100 MHz to 350 MHz. VSWR should be less than 1.25 for deflection factors of 5 mV and 10 mV/div. VSWR should be less than 1.15 for deflection factors of 20 mV/div through 5 V/div.

http://manoman.sqhill.com

72. OPTIONAL — CHECK CALIBRATOR OVERSHOOT, RINGING, and RISETIME

NOTE

These characteristics have been factory verified to specifications. Due to their long term stability (failure to perform is most likely the result of catastrophic failure) only a qualitative check is done here. The Calibrator overshoot and ringing on the 485 is compared to that observed from the Tunnel Diode Pulser.

a. Set CH 1 input to 50 Ω, DC coupled; TIME/DIV to 1 ns; VOLTS/DIV to 20 mV.

b. Connect the Type 106/Tunnel Diode Pulser through a 2X BNC attenuator to the CH 1 input (approximately 5 div step). Observe the reference "flat" portion following the positive step.

c. Connect a 5X BNC attenuator to the CAL 5 V output and connect this signal to CH 1 input (5 div step). Again, observe the "flat" portion following the positive step. This response should be within ±0.1 div (±2%) of the reference "flat" portion observed in b.

d. Check positive edge risetime of the Calibrator as observed on the 485. Should be less than 1.4 ns.

73. ADJUST A TRIGGER (Board Next to Atten Shield on Bottom of Oscilloscope)

a. Set HORIZ DISPLAY to A; A TIME/DIV to 10 μs/div; A COUPLING to AC; A TRIG HOLDOFF to NORM; A SOURCE to INT; A SLOPE to +; SWEEP MODE to NORM.

b. Set LEV CTR, R725 (R1025)[1], to midrange; A TRIG SENS, R755 (R1055), CCW; ARM TD, R765 (R1075), CW; OUT TD, R775 (R1065), CW; LEVEL, R720, (R1020) CW. Apply one division of 50 kHz reference signal from the Type 191 Signal Generator to the CH 1 input.

c. Turn ARM TD CCW until trace disappears. Note position of pot.

d. Adjust LEVEL for a stable display.

e. Turn ARM TD further CCW until trace disappears. Note position of pot.

f. Adjust ARM TD pot halfway between positions noted in steps c and e.

g. Disconnect coax from J763 (J1063 for B trigger). J763 is rear white and brown coax on A trigger board (J1063 is rear white and brown coax on B trigger board).

[1] **Circuit numbers in parenthesis pertain to B trigger adjustments, see step 74B.**

h. Monitor the voltage at the OUT TD test point (located near the OUT TD control) and adjust the OUT TD control R775 (R1065) until the trace just disappears. Record this voltage.

i. Reconnect the coax to J763 (J1063).

j. Adjust the OUT TD control CCW until the trace just disappears again. Record this voltage.

k. Subtract the voltage in part j from the voltage recorded in part h. Multiply the result by 0.8 and add this quantity to the voltage recorded in part j.

l. Adjust the OUT TD control to produce a reading that equals the final amount calculated in part k.

m. Adjust TRIGGER SENS, R755 (R1055) until display cannot be triggered on 0.15 div of signal by rotating the LEVEL control, but can be triggered on 0.18 div of signal by rotating the LEVEL control, (to set signal amplitude to 0.15 or 0.18 div, first adjust the generator amplitude for a display of 1.5 or 1.8 divisions, then increase the VOLTS/DIV setting by a factor of 10). Increase generator signal to produce a two division display.

n. Adjust LEV CTR for a stable display with LEVEL knob dot positioned at top center (12:00 o'clock).

o. Switch trigger COUPLING to DC, adjust INT TRIG DC BAL, R560 (located on Vertical Amplifier board), for stable triggering with display vertically centered on graticule.

p. Apply signal to CH 2 input. Check for triggering within 0.5 divisions of graticule center with SLOPE in + and — positions when VERTICAL MODE is set to CH 1 and CH 2; and within one division of graticule center when VERTICAL MODE is set to ADD. Disconnect signal from 485.

74A. ADJUST EXTERNAL TRIGGER LEVEL CENTERING

a. Set A trigger SOURCE to EXT; A LEVEL knob dot to 12:00 o'clock.

b. Connect the Type 191 Signal Generator to the A EXT TRIG connector. Hold the A EXT TRIG button in, and adjust the Type 191 for a 2 division display of 50 kHz signal.

c. Adjust R830 (IDENT) while depressing the A EXT TRIG button, so the trace starts at an equal distance above and below graticule center when switching the A Trigger SLOPE switch from + to —. Release the A EXT TRIG button.

d. Remove the signal from the A EXT TRIG connector, and apply it to the CH 1 input.

http://manoman.sqhill.com

74B. ADJUST B TRIGGERS (Located on Board Behind B Triggering Switches on Top of Oscilloscope)

NOTE

To prevent possible interference from the 1 MHz calibrator signal, set the calibrator FREQ pushbutton to 1 kHz position during B Trigger checks and adjustments.

a. Set HORIZ DISPLAY to B; A TIME/DIV to 50 μs; B TIME/DIV to 10 μs; B SOURCE to INT; A & B COUPLING to AC; A & B LEVEL CW; SWEEP MODE to AUTO TRIG; VERT MODE to CH 1.

b. Adjust the B triggering by repeating step 73, parts b through n (substitute the J1063 coax for the J763 coax in step 73 parts g and i, and substitute the following adjustment controls; R1055 for R755, R1075 for R765, R1065 for R775, R1025 for R725, R1020 for R720).

c. Use LEVEL controls to trigger the A and B sweeps; set HORIZ DISPLAY to ALT; rotate the DTP and check that the intensified zone of the A trace jumps from cycle to cycle without movement of the B trace. Disconnect the Type 191 from the 485.

75A. CHECK EXTERNAL A and B TRIGGERS

a. Set VERT MODE to CH 2; INT TRIG to NORM; HORIZ DISPLAY to A; SWEEP MODE to NORM TRIG; A Trigger SOURCE to EXT, CH 2 input to 50 Ω.

b. Apply 20 mV of 50 kHz reference signal (as viewed on the CRT) from the 191 through the network shown in Fig. 5-2. Set the 191 to 50 MHz (without changing the Amplitude control). Set the A & B TIME/DIV controls to 20 ns/division. Adjust the LEVEL control and check that stable triggering can be achieved. Disconnect the Type 191 from the Fig. 5-2 network.

c. Connect the High Frequency Constant-Amplitude Signal Generator to the Fig. 5-2 T connector through a GR to BNC adapter. Adjust generator amplitude to provide 100 mV of displayed Reference Frequency signal on the CRT (use external attenuators as necessary between the generator cable and the T connector to obtain the 100 mV displayed signal).

d. Switch the generator to 350 MHz without changing the amplitude setting. Set the A TIME/DIV to one ns/division (for B trigger check, set A TIME/DIV to 10 ns/division and B TIME/DIV to one ns/division.

e. Check that stable triggering can be achieved by adjusting the LEVEL control.

f. Set the SWEEP MODE to AUTO; A trigger SOURCE to INT; HORIZ DISPLAY to B. Remove the connection from the A EXT TRIG input and connect it to the B EXT TRIG input; set B trigger SOURCE to EXT.

g. Repeat Step 75A parts b through e for the B trigger.

h. Disconnect generator and Fig. 5-2 network from the 485.

75B. CHECK INTERNAL A and B 350 MHz TRIGGERING

a. Set VERT MODE to CH 2; INT TRIG to NORM; A Trigger SOURCE to INT; CH 2 input to 50 Ω; CH 2 VOLTS/DIV to 100 mV/division; A TIME/DIV to one ns.

b. Apply a 350 MHz signal from the High Frequency Constant-Amplitude Signal Generator to the CH 2 input through a GR to BNC adapter and adjust for a 1.5 division CRT display (change CH 2 VOLTS/DIV and generator amplitude control as necessary to produce the 1.5 division display).

c. Check that stable triggering can be achieved by adjusting the LEVEL control.

d. Set the SWEEP MODE to AUTO; HORIZ DISPLAY to B; B trigger SOURCE to INT; A TIME/DIV to 10 ns/division; B TIME/DIV to one ns/division.

e. Repeat step 75B parts b and c for B sweep 350 MHz internal triggering.

f. Disconnect generator and cables from the 485.

76. CHECK A EXT TRIGGER DELAY MATCH TO CH 2

a. CH 2 50 mV/div; DC coupled; A triggering SOURCE EXT; COUPLING AC; SLOPE +; TIME/DIV 1 ns; CAL 5 FREQ 1 MHz.

b. Connect 50 Ω termination at A EXT TRIG; connect 2X attenuators to 50 Ω termination and CH 2 input; connect Dual Input cable to 2X attenuators; connect CAL 5 V output to Dual Input Connector. See Fig. 5-2.

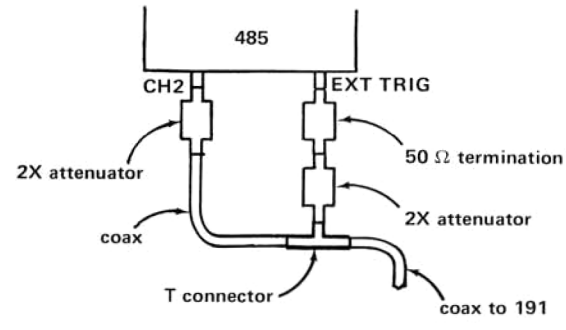

Fig. 5-2. External Trigger Check Connection.

http://manoman.sqhill.com

c. Use the A LEVEL control to trigger on the larger of the positive steps. This should give a 3.3 div display (167 mV) on CH 2. Use CH 2 POSITION control to center the CH 2 step vertically.

d. Hold the A EXT TRIG pushbutton and use the A LEVEL to center the large step vertically. Use POSITION (HORIZ) to set the 50% amplitude point exactly 0.1 div to the right of center screen (this 0.1 ns offset compensates for the delay through the one 50 Ω BNC termination).

e. Check for 0.5 ns or less delay match of EXT TRIG to CH 2 50 Ω (±0.5 div).

f. Add a 50 Ω BNC termination at CH 2 input; CH 2 input to 1 MΩ.

g. Repeat step d, but use POSITION (HORIZ) to set 50% amplitude point exactly to center screen.

h. Check for 0.5 ns or less delay match of EXT TRIG to CH 2 1 MΩ (±0.5 div).

77. CHECK EXTERNAL TRIGGER LEVEL RANGE A and B

a. Connect 1 V from the Amplitude Calibrator to A EXT TRIG; A TRIGGER SOURCE to EXT; SWEEP MODE to NORM.

b. Rotate LEVEL and check that sweep stops running at both ends of the LEVEL range.

c. Amplitude Calibrator to 10 V; A TRIGGER SOURCE to EXT ÷ 10.

d. Rotate LEVEL and check that sweep stops running at both ends of the LEVEL range.

e. SWEEP MODE to AUTO; HORIZ DISPLAY to B.

f. Repeat for B.

78. CHECK SINGLE SWEEP

a. Trigger A Sweep on 1 div of 50 kHz.

b. Remove signal and switch to SINGLE SWEEP.

c. Reset lamp should light.

d. Apply signal, should have one sweep, READY light should go off.

e. Remove signal and reset. RESET lamp should light.

79. CHECK A EXT TRIG RESPONSE

a. Connect TD Pulser through a 50 Ω termination to the A EXT TRIG input.

b. Depress the A EXT TRIG switch and check risetime to less than 1.6 ns.

80. ADJUST X-Y BALANCE (Located Rear of Sweep Board)

a. Set VERT MODE to ALT; VOLTS/DIV to 20 mV.

b. Center both traces.

c. Set VERT MODE to X-Y.

d. Adjust X-Y center (R1355 located on Sweep board) to center spot.

81. ADJUST X-Y GAIN (Located Rear of Vertical Board)

a. Connect 120 mV from 50 Ω Amplitude Calibrator to CH 2 50 Ω input impedance.

b. Adjust X GAIN (R575) for 6 div, must match CH 2 gain ±1%.

c. 5 mV/div to 5 V/div gain accuracy ±2%.

82. ADJUST X-Y PHASING (Located Rear of Sweep Board)

a. Connect CH 1 and CH 2 to Type 191 generator through dual input cable.

b. Apply 10 div of 50 kHz; CH 1 to 50 mV, CH 2 to 20 mV.

c. Switch to 4 MHz.

http://manoman.sqhill.com

d. Adjust X-Y L1346 (Sweep board) for a closed lissajous figure.

e. Switch Type 191 to next lower range, adjust X-Y R1348 (Sweep board) for closed lissajous figure.

f. Recheck d and e as they may interact.

g. Switch to 20 MHz limit, compromise phasing adjustments between full and 20 MHz limit for less than 0.2 div opening with 7 div of signal.

83. CHECK X-Y BANDWIDTH

a. Ground CH 1, apply 10 div of 50 kHz to CH 2.

b. Check for at least 4 MHz bandwidth at –3 dB point.

84. CHECK BANDWIDTH LIMIT

a. Set VERT MODE to CH 1 and apply 6 div of 50 kHz.

b. Hold BANDWIDTH pushbutton in.

c. Check for 17 to 23 MHz bandwidth at –3 dB point.

http://manoman.sqhill.com

RACKMOUNTING

Introduction

The TEKTRONIX Type R485 Oscilloscope is designed to mount in a standard 19-inch rack.

Rack Dimensions

Height. At least seven inches of vertical space is required to mount this instrument in a cabinet rack.

Width. Minimum width of the opening between the left and right front rails of the rack must be 17-5/8 inches. This allows room on each side of the instrument for the slide-out tracks to operate freely, permitting the instrument to move smoothly in and out of the rack.

Depth. Total depth necessary to mount the Type R485 in a cabinet rack is 19-3/8 inches. This allows room for air circulation, power cord and the necessary mounting hardware.

Slide-Out Tracks

The hardware provided for mounting the slide-out tracks is shown in Fig. 6-1. Since the hardware is intended to make the tracks compatible with a variety of cabinet racks and installation methods, not all of it will be needed for this installation. Use only the hardware that is required for the mounting method used.

Fig. 6-2 shows the Type R485 installed in a cabinet-type rack. The slide-out tracks provided with the Type R485 permit it to be extended out of the rack for maintenance or calibration without removing the instrument from the rack. In the fully extended position, the Type R485 can be tilted up so the bottom of the instrument can be reached for maintenance or calibration. To operate the Type R485 in the extended position, be sure the power cord and any interconnecting cables are long enough for this purpose. When not extended, the instrument is held in the rack with four securing screws (see Fig. 6-2A).

The slide-out tracks consist of two assemblies—one for the left side of the instrument and one for the right side. Fig. 6-3 shows the complete slide-out track assemblies. The stationary section of each assembly attaches to the front and rear rails of the rack, and the chassis section is attached to the instrument. The intermediate section slides between the stationary and chassis sections and allows the Type R485 to be extended out of the track. When the instrument is shipped, the stationary and intermediate sections of the tracks are packaged as matched sets and should not be separated. To identify the left or right assembly note the position of the automatic latch (see Fig. 6-3). When mounted in the rack, the automatic latch should be at the top of both assemblies. The chassis sections are installed on the instrument at the factory.

Mounting Procedure

The front flanges of the stationary sections may be mounted in front of (outside) or behind (inside) the front rails of the rack, depending on the type of rack. If the front rails of the rack are tapped for 10-32 screws, the front flanges are mounted outside of the rails. If the front rails of the rack are not tapped for 10-32 screws, the front flanges are mounted inside the front rail and a bar nut is used. Fig. 6-4 shows these methods of mounting the stationary sections.

Use the following procedure to install the Type R485 in a rack:

1. Select the proper front-rail mounting holes for the stationary sections, using the measurements shown in Fig. 6-5.

2. If the mounting flanges of the stationary sections are to be mounted in front of the front rails (rails tapped for 10-32 screws), mount each stationary section as shown in Fig. 6-4A.

3. If the mounting flanges of the stationary sections are to be mounted behind the front rails (rails not tapped for 10-32 screws), mount each stationary section as shown in Fig. 6-4B.

4. Refer to Fig. 6-6 to insert the instrument into the rack. Do not connect the power cord or install the securing screws until all adjustments have been made.

5. Position the instrument so the pivot screws (widest part of instrument) are approximately even with the front rails.

6. Adjust the alignment of the stationary sections according to the procedure outlined in Fig. 6-7.

7. After the tracks operate smoothly, connect the power cord to the power source.

http://manoman.sqhill.com

8. Push the instrument all the way into the rack and secure it to the rack with the securing screws and washers as shown in Fig. 6-6.

Alternate Rear Mounting Methods

CAUTION

Although the following methods provide satisfactory mounting under normal conditions, they do not provide solid support at the rear of the instrument. If the instrument will be subjected to severe shock or vibration consult your local TEKTRONIX Field Engineer for rear support mounting information.

An alternative method of supporting the rear of the instrument is shown in Fig. 6-8. The rear support brackets supplied with the instrument allow it to be mounted in a rack which has a spacing between the front and rear rails of 11 to 24 inches. Fig. 6-8A illustrates the mounting method if the rear rails are tapped for 10-32 screws, and Fig. 6-8B illustrates the mounting method if the rear rails are not tapped for 10-32 screws.

If the rack does not have a rear rail, or if the distance between the front and rear rails are too large, the instrument may be mounted without the use of the slide-out tracks. Fasten the instrument to the front rails of the rack with the securing screws and washers. This mounting method should be used only if the instrument will not be subjected to shock or vibration and if it is installed in a stationary location.

Removing or Installing the Instrument

After initial installation and adjustment of the slide-out tracks, the Type R485 can be removed or installed by following the instructions given in Fig. 6-6. No further adjustments are required under normal conditions.

To remove the R485 from the rack without removing the rack mount housing;

a. Remove the 4 screws from the feet at rear of the instrument.

b. Disconnect all connections to the rear of the instrument, unplug the power cord.

c. Remove the blue rear panel rim around the rear of the instrument.

d. Pull the R485 out the front of the rack mount housing.

e. To insert the R485 into the rack mount housing check the maintance section, reinstalling the wrap around cover, for caution.

Slide-Out Track Lubrication

The slide-out tracks normally require no lubrication. The special finish on the sliding surfaces provide permanent lubrication. However, if the tracks do not slide smoothly even after proper adjustment, a thin coating of paraffin rubbed onto the sliding surfaces may improve operation.

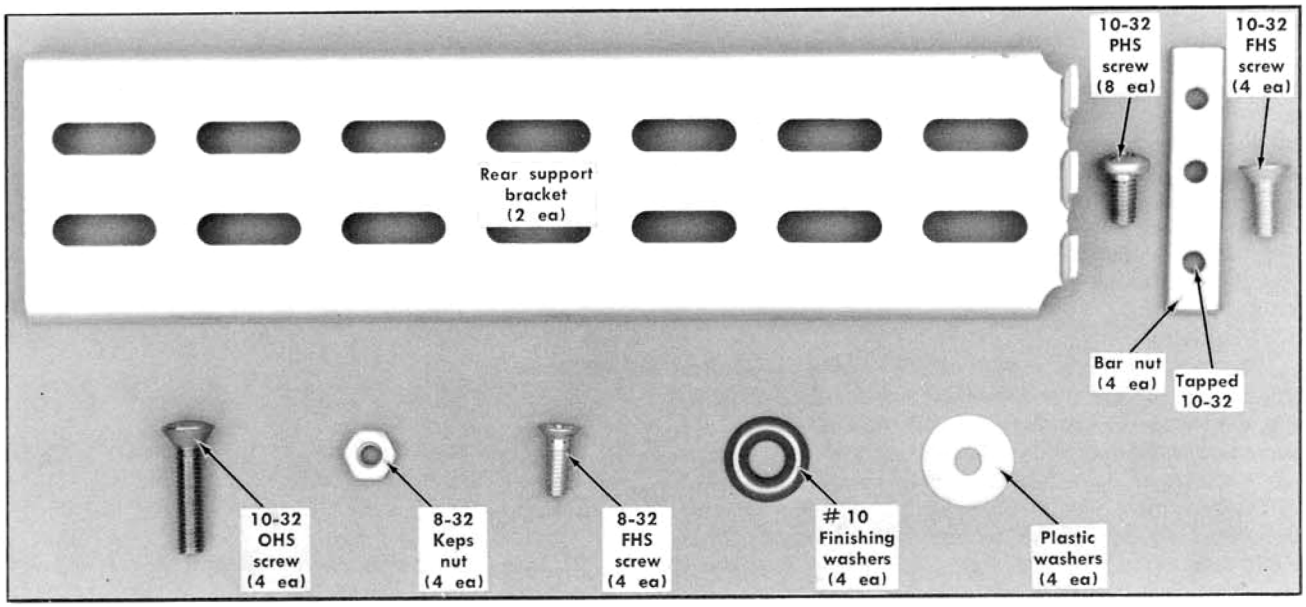

Fig. 6-1. Hardware needed to mount the instrument in the cabinet rack.

http://manoman.sqhill.com

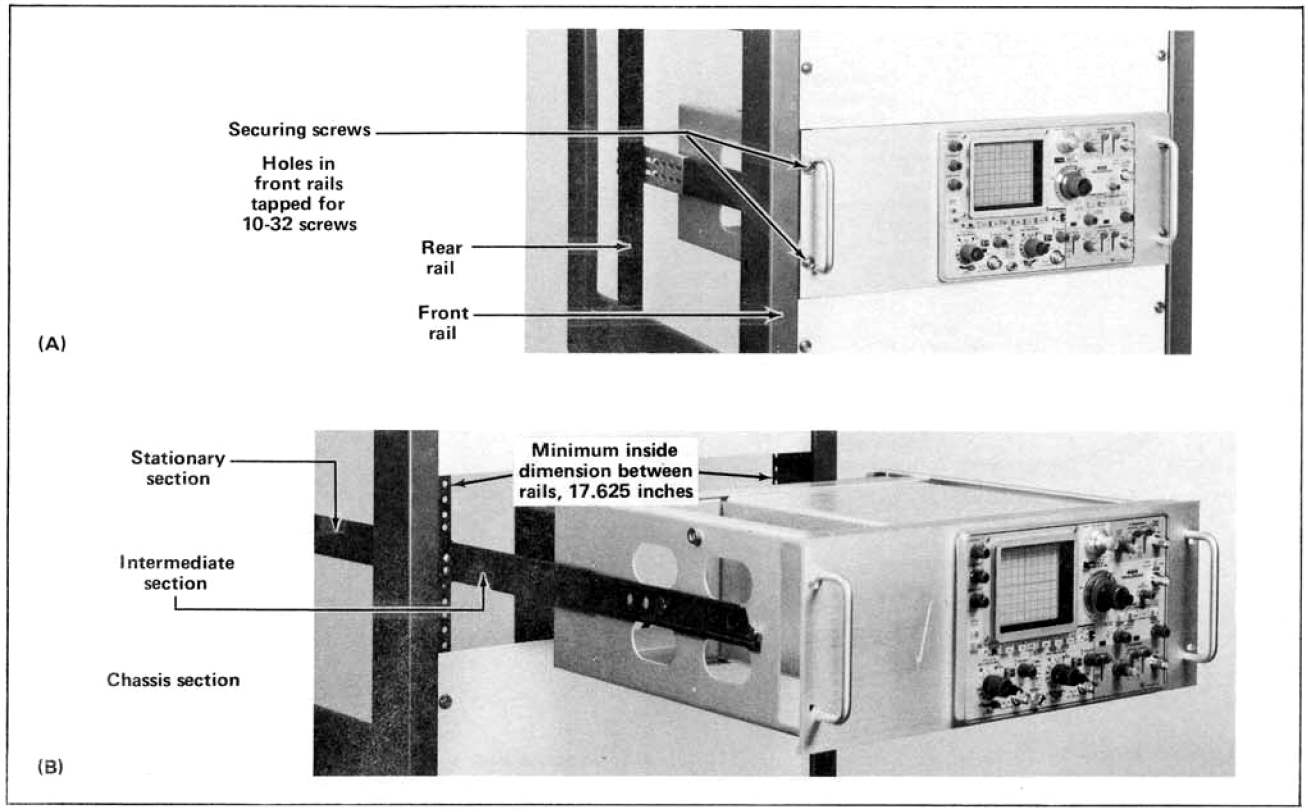

Fig. 6-2. The 485 installed in a cabinet rack (sides removed); (A) held into rack with securing screws, (B) extended on slideout tracks.

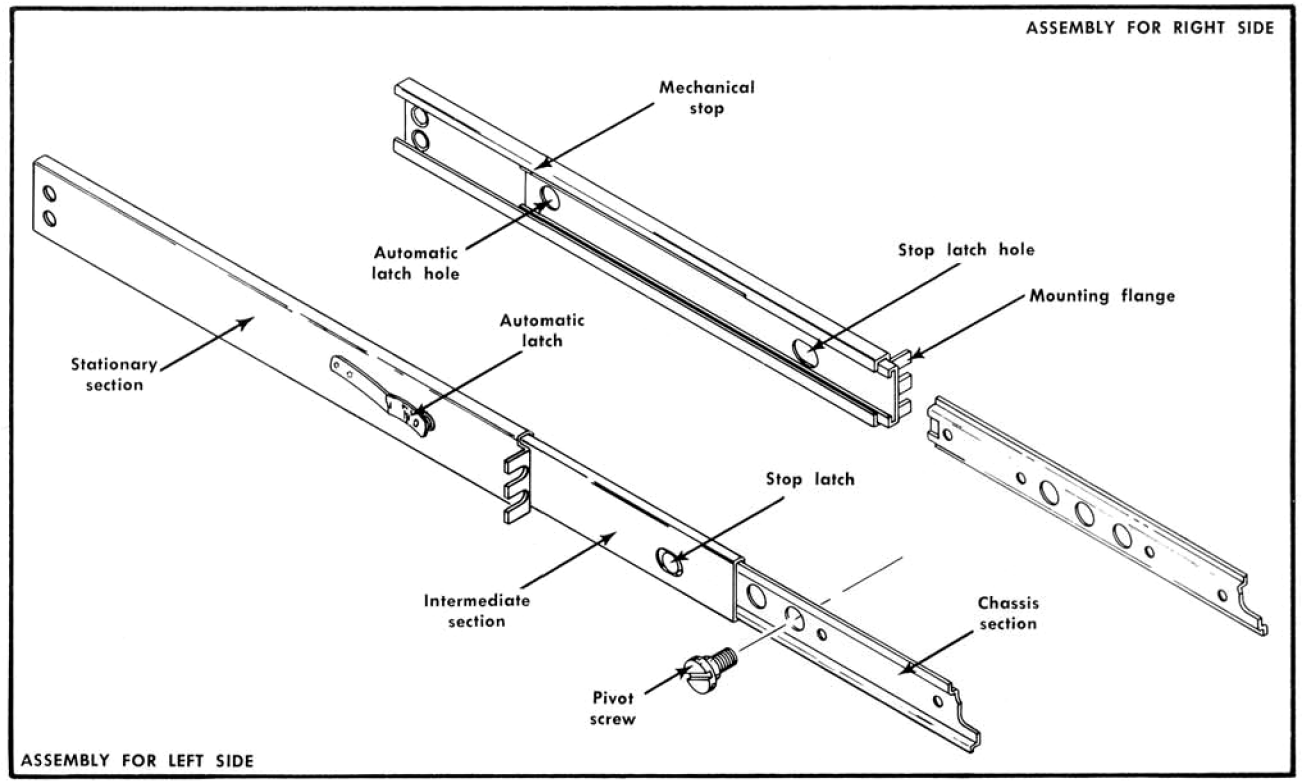

Fig. 6-3. Slideout track assemblies.

http://manoman.sqhill.com

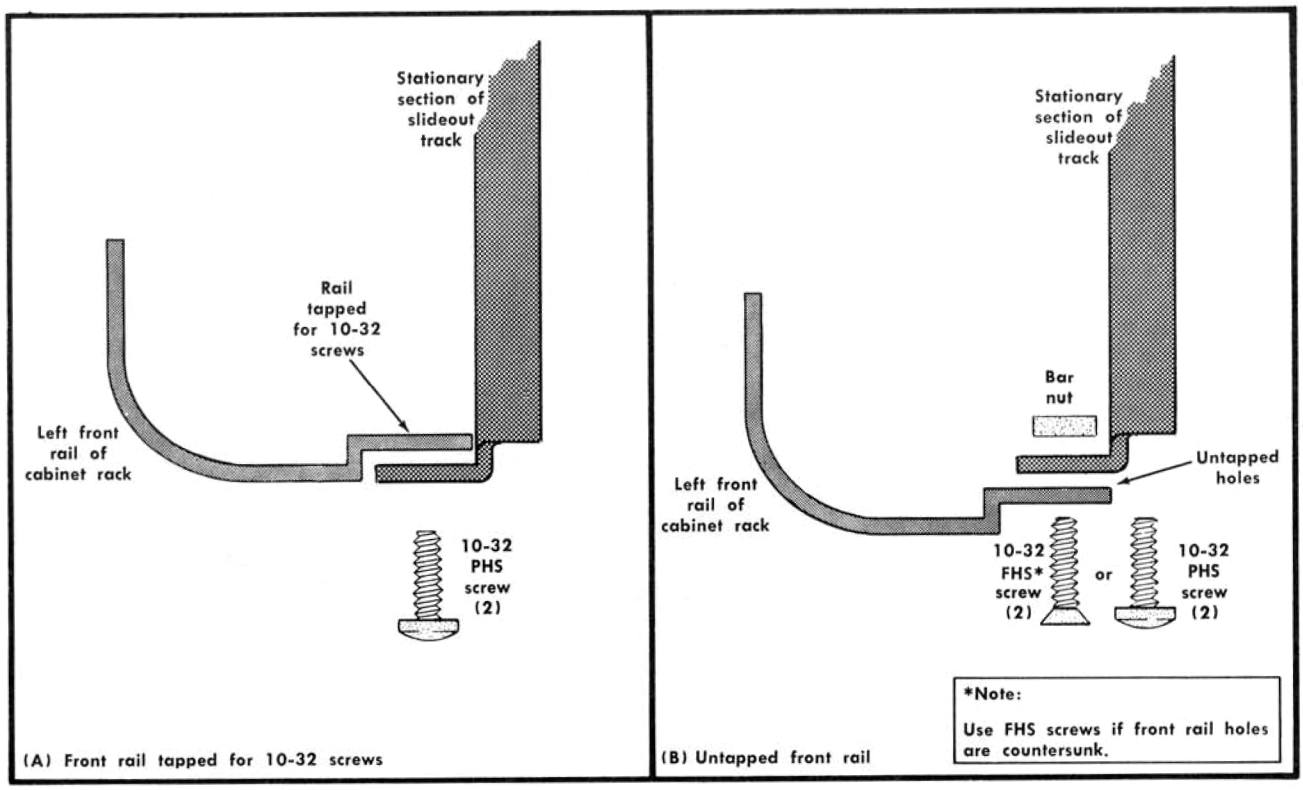

Fig. 6-4. Methods of mounting the stationary section to the front rails.

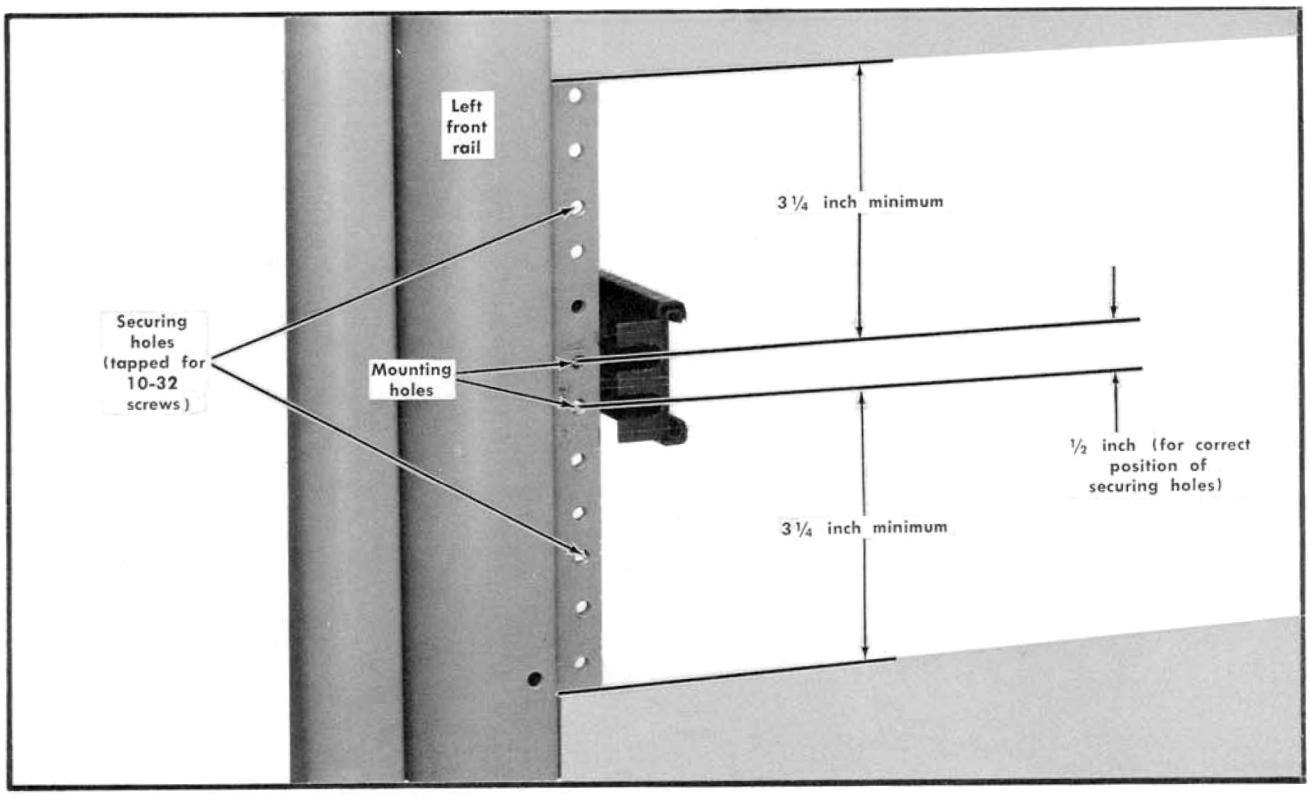

Fig. 6-5. Locating the mounting holes for the stationary sections. Same dimensions apply to right stationary section.

http://manoman.sqhill.com

TO INSERT THE R485

1. Pull the intermediate section of each slideout track out to its fully extended position.
2. Insert the chassis sections (on instrument) into the intermediate sections.
3. Press both stop latches and push the instrument into the rack until the latches snap into the stop latch holes.
4. Connect the power cord to the power source.
5. Again press the stop latches and push the instrument all the way into the rack.
6. To secure the R485 to the rack, insert the 4 securing screws (with finishing washers and teflon washers) through the slots in the instrument front panel and screw them into the front rails of the rack.

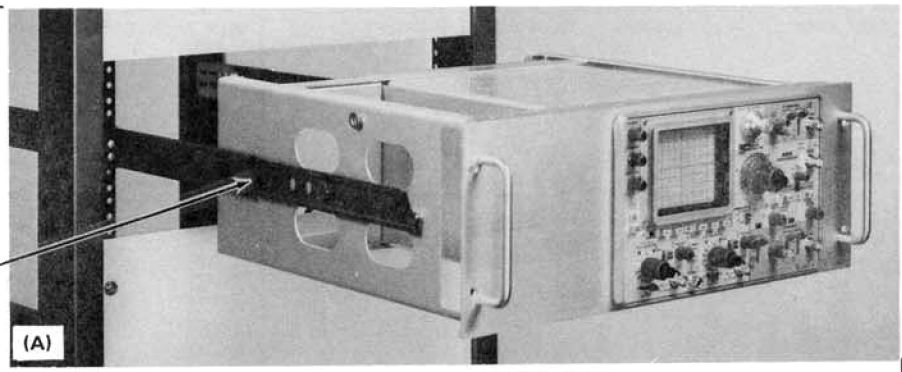

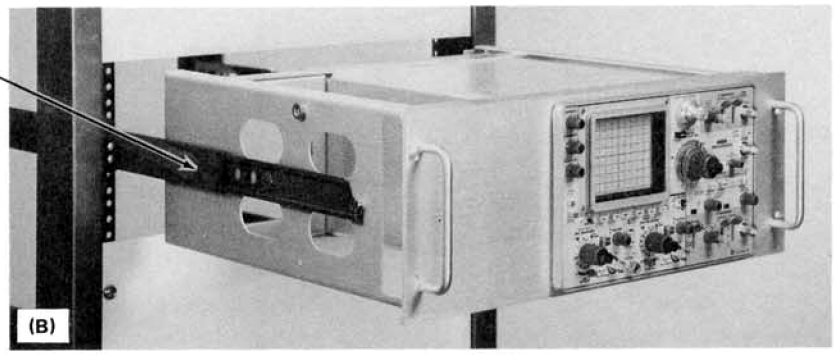

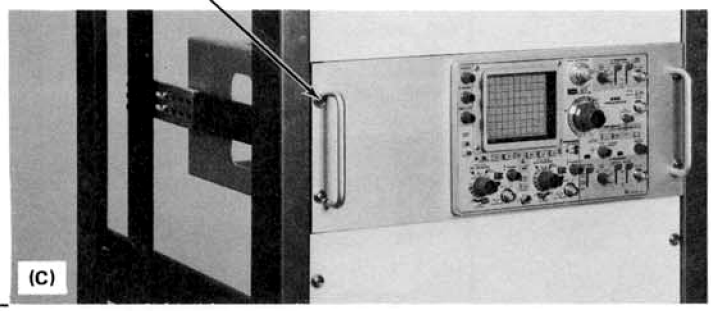

TO REMOVE THE R485

1. Remove the securing screws and washers.
2. Pull the instrument outward until the stop latches snap into the stop latch holes.
3. Disconnect the power cord.
4. Press both stop latches and pull the instrument out of the rack.

Fig. 6-6. Procedure for inserting or removing the instrument after the slideout tracks have been installed.

TO ADJUST ALIGNMENT:

1. Position the instrument with the pivot screws approximately even with the front rails.
2. Loosen the mounting screws at the front of both stationary sections (left side shown).
3. Allow the tracks to seek their normal positions with the instrument centered in the rack.
4. Tighten the mounting screws.
5. Push the instrument all the way into the rack. If tracks do not slide smoothly, check for correct spacing between the rear supports.
6. Check the vertical positioning of the R485 front panel with respect to adjacent instruments or panels. If not correct, reposition as necessary.

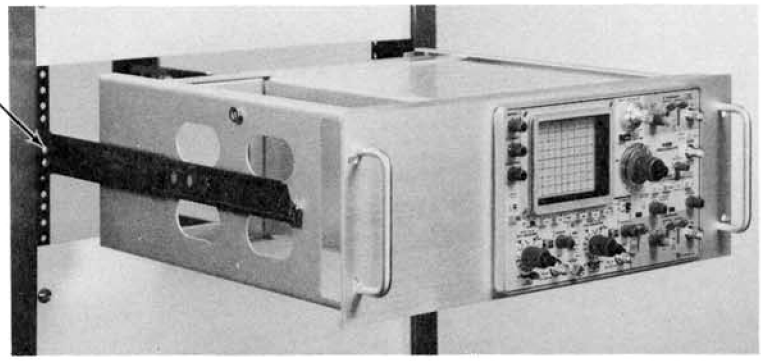

Fig. 6-7. Alignment adjustments for correct operation.

http://manoman.sqhill.com

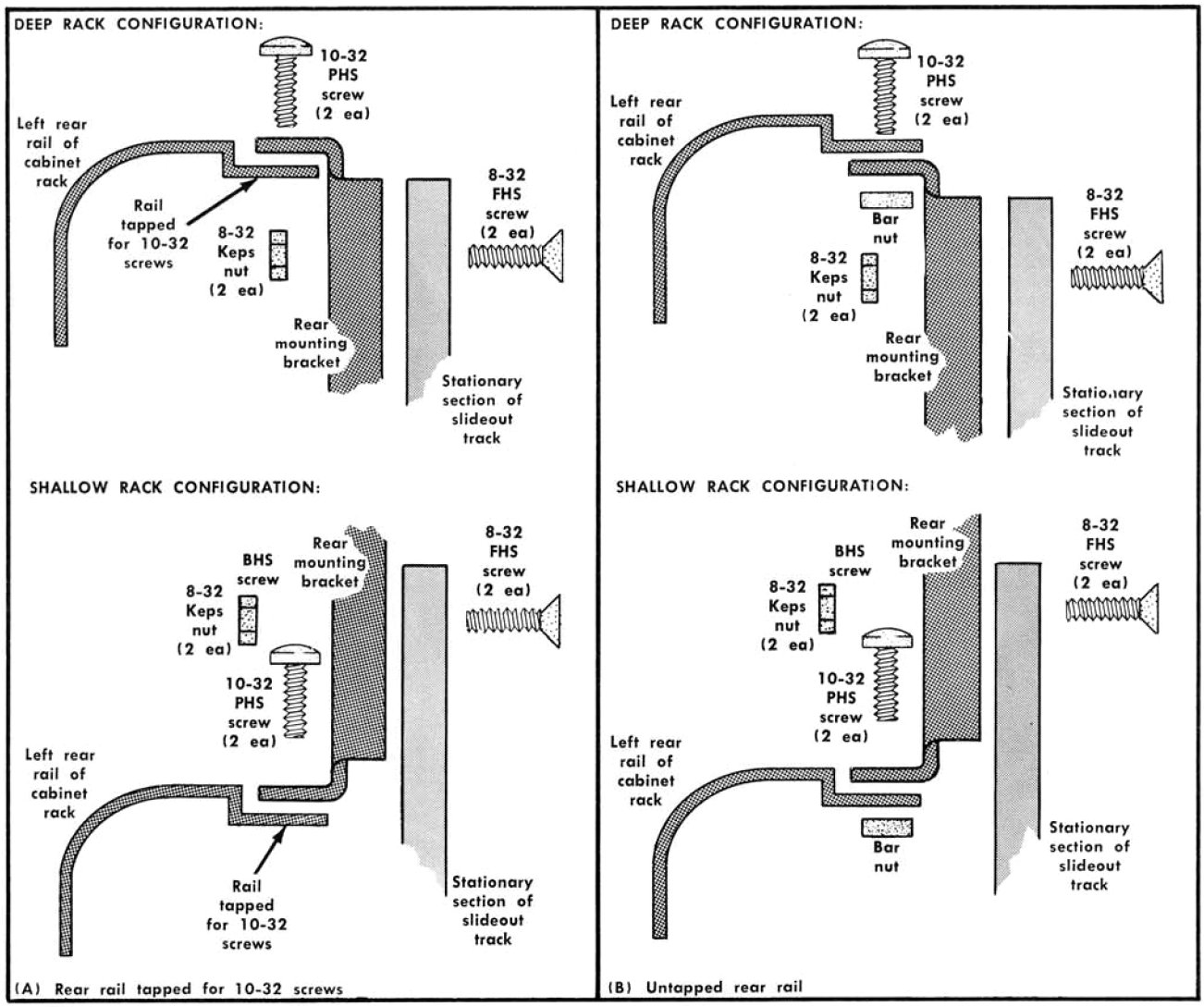

Fig. 6-8. Alternative method of installing the instrument using rear support brackets.

http://manoman.sqhill.com

REPLACEABLE ELECTRICAL PARTS

PARTS ORDERING INFORMATION

Replacement parts are available from or through your local Tektronix, Inc. Field Office or representative.

Changes to Tektronix instruments are sometimes made to accommodate improved components as they become available, and to give you the benefit of the latest circuit improvements developed in our engineering department. It is therefore important, when ordering parts, to include the following information in your order: Part number, instrument type or number, serial number, and modification number if applicable.

If a part you have ordered has been replaced with a new or improved part, your local Tektronix, Inc. Field Office or representative will contact you concerning any change in part number.

Change information, if any, is located at the rear of this manual.

SPECIAL NOTES AND SYMBOLS

X000	Part first added at this serial number
00X	Part removed after this serial number

ITEM NAME

In the Parts List, an Item Name is separated from the description by a colon (:). Because of space limitations, an Item Name may sometimes appear as incomplete. For further Item Name identification, the U.S. Federal Cataloging Handbook H6-1 can be utilized where possible.

ABBREVIATIONS

ACTR	ACTUATOR	PLSTC	PLASTIC
ASSY	ASSEMBLY	QTZ	QUARTZ
CAP	CAPACITOR	RECP	RECEPTACLE
CER	CERAMIC	RES	RESISTOR
CKT	CIRCUIT	RF	RADIO FREQUENCY
COMP	COMPOSITION	SEL	SELECTED
CONN	CONNECTOR	SEMICOND	SEMICONDUCTOR
ELCTLT	ELECTROLYTIC	SENS	SENSITIVE
ELEC	ELECTRICAL	VAR	VARIABLE
INCAND	INCANDESCENT	WW	WIREWOUND
LED	LIGHT EMITTING DIODE	XFMR	TRANSFORMER
NONWIR	NON WIREWOUND	XTAL	CRYSTAL

http://manoman.sqhill.com

CROSS INDEX—MFR. CODE NUMBER TO MANUFACTURER

Mfr. Code	Manufacturer	Address	City, State, Zip
0000A	LEMO USA	2015 2ND STREET	BERKLEY, CA 94710
00779	AMP, INC.	P O BOX 3608	HARRISBURG, PA 17105
00853	SANGAMO ELECTRIC CO., S. CAROLINA DIV.	P O BOX 128	PICKENS, SC 29671
01121	ALLEN-BRADLEY COMPANY	1201 2ND STREET SOUTH	MILWAUKEE, WI 53204
01295	TEXAS INSTRUMENTS, INC., SEMICONDUCTOR GROUP	P O BOX 5012, 13500 N CENTRAL EXPRESSWAY	DALLAS, TX 75222
02735	RCA CORPORATION, SOLID STATE DIVISION	ROUTE 202	SOMERVILLE, NY 08876
03888	KDI PYROFILM CORPORATION	60 S JEFFERSON ROAD	WHIPPANY, NJ 07981
04222	AVX CERAMICS, DIVISION OF AVX CORP.	P O BOX 867, 19TH AVE. SOUTH	MURTLE BEACH, SC 29577
04713	MOTOROLA, INC., SEMICONDUCTOR PROD. DIV.	5005 E MCDOWELL RD,PO BOX 20923	PHOENIX, AZ 85036
05091	TRI-ORDINATE CORPORATION	343 SNYDER AVENUE	BERKELEY HEIGHTS, NJ 07922
05397	UNION CARBIDE CORPORATION, MATERIALS SYSTEMS DIVISION	11901 MADISON AVENUE	CLEVELAND, OH 44101
05587	COUCH, S.H., DIVISION, ESB, INC.	36 RIVER STREET	BOSTON, MA 02126
07263	FAIRCHILD SEMICONDUCTOR, A DIV. OF FAIRCHILD CAMERA AND INSTRUMENT CORP.	464 ELLIS STREET	MOUNTAIN VIEW, CA 94042
07910	TELEDYNE SEMICONDUCTOR	12515 CHADRON AVE.	HAWTHORNE, CA 90250
08806	GENERAL ELECTRIC CO., MINIATURE LAMP PRODUCTS DEPARTMENT	NELA PARK	CLEVELAND, OH 44112
11237	CTS KEENE, INC.	3230 RIVERSIDE AVE.	PASO ROBLES, CA 93446
12697	CLAROSTAT MFG. CO., INC.	LOWER WASHINGTON STREET	DOVER, NH 03820
12969	UNITRODE CORPORATION	580 PLEASANT STREET	WATERTOWN, MA 02172
14193	CAL-R, INC.	1601 OLYMPIC BLVD.	SANTA MONICA, CA 90404
14298	AMERICAN COMPONENTS, INC., AN INSILCO COMPANY	8TH AVE. AT HARRY STREET	CONSHOHOCKEN, PA 19428
14752	ELECTRO CUBE INC.	1710 S. DEL MAR AVE.	SAN GABRIEL, CA 91776
15454	RODAN INDUSTRIES, INC.	2905 BLUE STAR ST.	ANAHEIM, CA 92806
16546	U.S. CAPACITOR CORP/CENTRALAB ELECTRONICS DIV.	4561 COLORADO	LOS ANGELES, CA 90039
18583	CURTIS INSTRUMENTS, INC.	200 KISCO AVE.	MOUNT KISCO, NY 10549
19701	ELECTRA-MIDLAND CORP., MEPCO ELECTRA INC.	P O BOX 760	MINERAL WELLS, TX 76067
24931	SPECIALTY CONNECTOR CO., INC.	3560 MADISON AVE.	INDIANAPOLIS, IN 46227
25088	SIEMENS CORP.	186 WOOD AVE. S	ISELIN, NJ 08830
27014	NATIONAL SEMICONDUCTOR CORP.	2900 SEMICONDUCTOR DR.	SANTA CLARA, CA 95051
28480	HEWLETT-PACKARD CO., CORPORATE HQ.	1501 PAGE MILL RD.	PALO ALTO, CA 94304
32293	INTERSIL, INC.	10900 N. TANTAU AVE.	CUPERTINO, CA 95014
32997	BOURNS, INC., TRIMPOT PRODUCTS DIV.	1200 COLUMBIA AVE.	RIVERSIDE, CA 92507
34553	AMPEREX ELECTRONIC CORP., COMPONENT DIV.	35 HOFFMAN AVE.	HAPPAUGE, NY 11787
50157	N. L. INDUSTRIES, INC., ELECTRONICS DEPT.	P. O. BOX 787	MUSKEGON, MI 49445
53944	ELT INC., GLOW LITE DIVISION	BOX 698	PAULS VALLEY, OK 73075
56289	SPRAGUE ELECTRIC CO.		NORTH ADAMS, MA 01247
71400	BUSSMAN MFG., DIVISION OF MCGRAW-EDISON CO.	2536 W. UNIVERSITY ST.	ST. LOUIS, MO 63107
71590	CENTRALAB ELECTRONICS, DIV. OF GLOBE-UNION, INC.	P O BOX 858	FORT DODGE, IA 50501
71744	CHICAGO MINIATURE LAMP WORKS	4433 RAVENSWOOD AVE.	CHICAGO, IL 60640
72982	ERIE TECHNOLOGICAL PRODUCTS, INC.	644 W. 12TH ST.	ERIE, PA 16512
73138	BECKMAN INSTRUMENTS, INC., HELIPOT DIV.	2500 HARBOR BLVD.	FULLERTON, CA 92634
73899	JFD ELECTRONICS COMPONENTS CORP.	PINETREE ROAD	OXFORD, NC 27565
74970	JOHNSON, E. F., CO.	299 10TH AVE. S. W.	WASECA, MN 56093
75042	TRW ELECTRONIC COMPONENTS, IRC FIXED RESISTORS, PHILADELPHIA DIVISION	401 N. BROAD ST.	PHILADELPHIA, PA 19108
76493	BELL INDUSTRIES, INC., MILLER, J. W., DIV.	19070 REYES AVE., P O BOX 5825	COMPTON, CA 90224
78488	STACKPOLE CARBON CO.		ST. MARYS, PA 15857
80009	TEKTRONIX, INC.	P O BOX 500	BEAVERTON, OR 97077
80294	BOURNS, INC., INSTRUMENT DIV.	6135 MAGNOLIA AVE.	RIVERSIDE, CA 92506
80740	BECKMAN INSTRUMENTS, INC.	2500 HARBOR BLVD.	FULLERTON, CA 92634
81073	GRAYHILL, INC.	561 HILLGROVE AVE., PO BOX 373	LA GRANGE, IL 60525
82104	STANDARD GRIGSBY CO., DIV. OF SUN CHEMICAL CORPORATION	920 RATHBONE AVENUE	AURORA, IL 60507

http://manoman.sqhill.com

CROSS INDEX—MFR. CODE NUMBER TO MANUFACTURER

Mfr. Code	Manufacturer	Address	City, State, Zip
82389	SWITCHCRAFT, INC.	5555 N. ELSTON AVE.	CHICAGO, IL 60630
84411	TRW ELECTRONIC COMPONENTS, TRW CAPACITORS	112 W. FIRST ST.	OGALLALA, NE 69153
89265	DELETED, REPLACED BY 77342		
90201	MALLORY CAPACITOR CO., DIV. OF P. R. MALLORY AND CO., INC.	3029 E WASHINGTON STREET P O BOX 372	INDIANAPOLIS, IN 46206
91418	RADIO MATERIALS COMPANY, DIV. OF P.R. MALLORY AND COMPANY, INC.	4242 W BRYN MAWR	CHICAGO, IL 60646
91637	DALE ELECTRONICS, INC.	P. O. BOX 609	COLUMBUS, NE 68601
91836	KINGS ELECTRONICS CO., INC.	40 MARBLEDALE ROAD	TUCKAHOE, NY 10707
93410	ESSEX INTERNATIONAL, INC., CONTROLS DIV. LEXINGTON PLANT	P. O. BOX 1007	MANSFIELD, OH 44903
93958	REPUBLIC ELECTRONICS CORPORATION	176 E 7TH STREET	PATERSON, NJ 07524
95275	VITRAMON, INC.	P O BOX 544	BRIDGEPORT, CT 06601
99699	DEUTSCH RELAYS, INC.	65 DALY ROAD	EAST NORTHPORT, LI, NY 11731

http://manoman.sqhill.com

Ckt No.	Tektronix Part No.	Serial/Model No. Eff	Dscont	Name & Description	Mfr Code	Mfr Part Number
A1(2)	670-1514-00			CKT BOARD ASSY:LIGHT BLOCK(485,485-1)	80009	670-1514-00
A2(2)	670-2599-00			CKT BOARD ASSY:LIGHT BLOCK(485-2)	80009	670-1599-00
A3(2)	670-1512-00	B010100	B079999	CKT BOARD ASSY:HI Z(485,485-1)	80009	670-1512-00
A3(2)	670-1512-01	B080000		CKT BOARD ASSY:HI Z(485,485-1)	80009	670-1512-01
A4(2)	670-2564-00			CKT BOARD ASSY:LOW Z CONTROL(485-2)	80009	670-2564-00
A5(2)	670-1513-00			CKT BOARD ASSY:50 OHM ATTEN(485,485-1)	80009	670-1513-00
A6(2)	670-2598-00			CKT BOARD ASSY:50 OHM ATTEN(485-2)	80009	670-2598-00
A7	670-1662-00			CKT BOARD ASSY:VERTICAL	80009	670-1662-00
A8	670-1660-00			CKT BOARD ASSY:A TRIGGER(485)	80009	670-1660-00
A9	670-2699-00			CKT BOARD ASSY:A TRIGGER(485-1,485-2)	80009	670-2699-00
A10	670-1663-00	B010100	B129999	CKT BOARD ASSY:SWEEP GEN	80009	670-1663-00
A10	670-1663-01	B130000		CKT BOARD ASSY:SWEEP GEN	80009	670-1663-01
A11	670-1666-00			CKT BOARD ASSY:HORIZ AMP.	80009	670-1666-00
A12	670-1664-00	B010100	B049999	CKT BOARD ASSY:TIMING SWEEP	80009	670-1664-00
A12	670-1664-01	B050000	B154999	CKT BOARD ASSY:TIMING SWEEP	80009	670-1664-01
A12	670-1664-02	B155000		CKT BOARD ASSY:TIMING SWEEP	80009	670-1664-02
A13	670-1665-00			CKT BOARD ASSY:POWER	80009	670-1665-00
A14	670-1659-00			CKT BOARD ASSY:INVERTER	80009	670-1659-00
A15	670-1661-00			CKT BOARD ASSY:TRANSFORMER	80009	670-1661-00
A16	670-2352-00			CKT BOARD ASSY:LINE FILTER	80009	670-2352-00
B1480	147-0035-00			MOTOR,DC:BRUSHLESS,10-15VDC,145MA	25088	1AD3001-0A
C1[1]	283-0204-00			CAP.,FXD,CER DI:0.01UF,20%,50V	72982	8121N075Z5U0103M
C2	283-0204-00			CAP.,FXD,CER DI:0.01UF,20%,50V	72982	8121N075Z5U0103M
C3	283-0204-00			CAP.,FXD,CER DI:0.01UF,20%,50V	72982	8121N075Z5U0103M
C4[1]	283-0204-00			CAP.,FXD,CER DI:0.01UF,20%,50V	72982	8121N075Z5U0103M
C10	283-0204-00			CAP.,FXD,CER DI:0.01UF,20%,50V	72982	8121N075Z5U0103M
C12[1]	281-0138-00			CAP.,VAR,PLSTC:0.4-1.2PF,600V	74970	273-0051-001
C16[1]	285-0816-03			CAP.,FXD,PLSTC:0.019UF,10%,600V	80009	285-0816-03
C17[1]	281-0580-00	B010100	B019999X	CAP.,FXD,CER DI:470PF,10%,500V	04222	7001-1374
C18	283-0181-00			CAP.,FXD,CER DI:1.8PF,10%,100V	72982	8101A108C0K189B
C20[1] C22	307-1014-01	B010100	B143499	ATTENUATOR,FXD:100X	80009	307-1014-01
C20[1] C22	307-1014-03	B143500		ATTENUATOR,FXD:100 X	80009	307-1014-03
C24[1,2]	307-1013-01	B010100	B143499	ATTENUATOR,FXD:10X	80009	307-1013-01
C24[1,2]	307-1013-03	B143500		ATTENUATOR,FXD:10 X	80009	307-1013-03
C25[1]	281-0615-00			CAP.,FXD,CER DI:3.9PF,+/-0.5PF,200V	72982	374-001C0J0399D
C26[1,2]	307-1013-01	B010100	B143499	ATTENUATOR,FXD:10X	80009	307-1013-01
C26[1,2]	307-1013-03	B143500		ATTENUATOR,FXD:10 X	80009	307-1013-03
C28[1]	281-0722-00			CAP.,FXD,CER DI:7.5PF,+/-1PF,500V	72982	374005C0G759B
C29[1]	283-0222-00			CAP.,FXD,CER DI:120PF,20%,50V	93958	51720-1
C33[1]	283-0141-00			CAP.,FXD,CER DI:200PF,10%,600V	14193	PD-0321-201K
C34[1]	283-0204-00			CAP.,FXD,CER DI:0.01UF,20%,50V	72982	8121N075Z5U0103M
C37[1]	283-0204-00			CAP.,FXD,CER DI:0.01UF,20%,50V	72982	8121N075Z5U0103M
C38[1]	290-0134-00	B010100	B019999	CAP.,FXD,ELCTLT:22UF,20%,15V	56289	150D226X0015B2
C38[1]	290-0140-00	B020000		CAP.,FXD,ELCTLT:120UF,20%,10V	05397	T110C127M010AS
C41[1]	283-0203-00			CAP.,FXD,CER DI:0.47UF,20%,50V	72982	8131N075 E474M
C43[1]	283-0160-00			CAP.,FXD,CER DI:1.5PF,10%,50V	72982	8101A058C0K159B
C44[1]	283-0204-00	XB020433	B020435	CAP.,FXD,CER DI:0.01UF,20%,50V	72982	8121N075Z5U0103M
C44[1]	283-0191-00	B020436		CAP.,FXD,CER DI:0.022UF,20%,50V	72982	8121N075Z5U0223M
C45[1]	283-0204-00			CAP.,FXD,CER DI:0.01UF,20%,50V	72982	8121N075Z5U0103M
C46[1]	281-0160-00			CAP.,VAR,CER DI:7-25PF,350V	72982	538-011B7-25

[1]485, 485-1 only
[2]C24 and C26 furnished as a unit.

http://manoman.sqhill.com

Ckt No.	Tektronix Part No.	Serial/Model No. Eff	Dscont	Name & Description	Mfr Code	Mfr Part Number
C47[1]	283-0070-00	B010100	B020432X	CAP.,FXD,CER DI:30PF,10%,50V	72982	8121-060C0G0300K
C48[1]	283-0065-00			CAP.,FXD,CER DI:0.001UF,5%,100F,100V	72982	805-505B102J
C49[1]	283-0330-00	B010100	B020432	CAP.,FXD,CER DI:100PF,5%,50V	72982	8111N068C0G0101J
C49[1]	283-0156-00	B020433		CAP.,FXD,CER DI:1000PF,+100-0%,200V	72982	8111A208Z5U0102Z
C50[1]	283-0204-00			CAP.,FXD,CER DI:0.01UF,20%,50V	72982	8121N075Z5U0103M
C51[1]	283-0204-00			CAP.,FXD,CER DI:0.01UF,20%,50V	72982	8121N075Z5U0103M
C52[1]	283-0203-00			CAP.,FXD,CER DI:0.47UF,20%,50V	72982	8131N075 E474M
C55[1]	281-0091-00			CAP.,VAR,CER DI:2-8PF	72982	538-011 A2-8
C57[1]	283-0158-00			CAP.,FXD,CER DI:1PF,10%,50V	72982	8101B057C0K0109B
C59[1]	283-0203-00			CAP.,FXD,CER DI:0.47UF,20%,50V	72982	8131N075 E474M
C60[1]	283-0204-00	XB030000		CAP.,FXD,CER DI:0.01UF,20%,50V	72982	8121N075Z5U0103M
C61[1]	290-0512-00			CAP.,FXD,ELCTLT:22UF,20%,15V	56289	196D226X0015KA1
C62[1]	283-0010-00			CAP.,FXD,CER DI:0.05UF,+100-20%,50V	56289	273C20
C67[1]	283-0204-00			CAP.,FXD,CER DI:0.01UF,20%,50V	72982	8121N075Z5U0103M
C68[1]	283-0260-00			CAP.,FXD,CER DI:5.6PF,5%,200V	72982	8111B200C0G569C
C69[1]	283-0140-00			CAP.,FXD,CER DI:4.7PF,5%,50V	72982	8101E003A479C
C70[1]	281-0645-00	B010100	B020432	CAP.,FXD,CER DI:8.2PF,+/-0.25PF,500V	72982	374-011C0H0829C
C70[1]	281-0161-00	B020433		CAP.,VAR,CER DI:5-15PF,350V	72982	518-000A5-15
C72[1]	283-0203-00			CAP.,FXD,CER DI:0.47UF,20%,50V	72982	8131N075 E474M
C73[1]	290-0512-00			CAP.,FXD,ELCTLT:22UF,20%,15V	56289	196D226X0015KA1
C74[1]	283-0204-00			CAP.,FXD,CER DI:0.01UF,20%,50V	72982	8121N075Z5U0103M
C76[1]	281-0651-00			CAP.,FXD,CER DI:47PF,5%,200V	72982	374-001T2H0470J
C77[1]	281-0651-00	B010100	B020432	CAP.,FXD,CER DI:47PF,5%,200V	72982	374-001T2H0470J
C77[1]	281-0634-00	B020433		CAP.,FXD,CER DI:10PF,+/-0.25PF,500V	72982	374-011C0G0100C
C82	283-0111-00			CAP.,FXD,CER DI:0.1UF,20%,50V	72982	8121-N088Z5U104M
C84	283-0204-00			CAP.,FXD,CER DI:0.01UF,20%,50V	72982	8121N075Z5U0103M
C86	290-0536-00	B010100	B109999	CAP.,FXD,ELCTLT:10UF,20%,25V	90201	TDC106M025FL
C86	290-0527-00	B110000		CAP.,FXD,ELCTLT:15UF,20%,20V	90201	TDC156M020FL
C87	283-0203-00			CAP.,FXD,CER DI:0.47UF,20%,50V	72982	8131N075 E474M
C92[1]	283-0204-00			CAP.,FXD,CER DI:0.01UF,20%,50V	72982	8121N075Z5U0103M
C93	290-0524-00			CAP.,FXD,ELCTLT:4.7UF,20%,10V	90201	TDC475M010EL
C94	283-0198-00			CAP.,FXD,CER DI:0.22UF,20%,50V	72982	8131N075 E224M
C95	283-0111-00			CAP.,FXD,CER DI:0.1UF,20%,50V	72982	8121-N088Z5U104M
C101	283-0278-00			CAP.,FXD,CER DI:2.2UF,20%,100V	72982	8150-M100Z5U225M
C102	283-0277-00			CAP.,FXD,CER DI:0.01UF,10%,100V	72982	CC1505W5R0103K
C104	283-0156-00			CAP.,FXD,CER DI:1000PF,+100-0%,200V	72982	8111A208Z5U0102Z
C105	283-0277-00			CAP.,FXD,CER DI:0.01UF,10%,100V	72982	CC1505W5R0103K
C201	290-0512-00			CAP.,FXD,ELCTLT:22UF,20%,15V	56289	196D226X0015KA1
C204	290-0512-00			CAP.,FXD,ELCTLT:22UF,20%,15V	56289	196D226X0015KA1
C211	290-0512-00			CAP.,FXD,ELCTLT:22UF,20%,15V	56289	196D226X0015KA1
C214	281-0123-00			CAP.,VAR,CER DI:5-25PF,100V	72982	518-000A5-25
C215[2]						
C216[2]						
C217	283-0191-00			CAP.,FXD,CER DI:0.022UF,20%,50V	72982	8121N075Z5U0223M
C223	283-0191-00			CAP.,FXD,CER DI:0.022UF,20%,50V	72982	8121N075Z5U0223M
C240	281-0151-00			CAP.,VAR,CER DI:1-3PF,100V	72982	518-600A1-3
C242	290-0526-00			CAP.,FXD,ELCTLT:6.8UF,20%,6V	90201	TDC685M006EL
C244[2]						
C247[2]						
C253	283-0198-00			CAP.,FXD,CER DI:0.22UF,20%,50V	72982	8131N075 E224M
C254	283-0238-00			CAP.,FXD,CER DI:0.01UF,10%,50V	72982	8121N075X7R0103K
C262	290-0524-00			CAP.,FXD,ELCTLT:4.7UF,20%,10V	90201	TDC475M010EL
C266	290-0524-00			CAP.,FXD,ELCTLT:4.7UF,20%,10V	90201	TDC475M010EL

[1]485, 485-1 only.
[2]Part of Circuit Board.

http://manoman.sqhill.com

Ckt No.	Tektronix Part No.	Serial/Model No. Eff	Dscont	Name & Description	Mfr Code	Mfr Part Number
C272	283-0023-00			CAP.,FXD,CER DI:0.1UF,+80-20%,12V	91418	MX0104Z1205R5
C282	283-0191-00			CAP.,FXD,CER DI:0.022UF,20%,50V	72982	8121N075Z5U0223M
C290	283-0191-00			CAP.,FXD,CER DI:0.022UF,20%,50V	72982	8121N075Z5U0223M
C310	290-0512-00			CAP.,FXD,ELCTLT:22UF,20%,15V	56289	196D226X0015KA1
C311[1]						
C312	290-0512-00			CAP.,FXD,ELCTLT:22UF,20%,15V	56289	196D226X0015KA1
C314	283-0191-00			CAP.,FXD,CER DI:0.022UF,20%,50V	72982	8121N075Z5U0223M
C315	281-0123-00			CAP.,VAR,CER DI:5-25PF,100V	72982	518-000A5-25
C316[1]						
C317	283-0191-00			CAP.,FXD,CER DI:0.022UF,20%,50V	72982	8121N075Z5U0223M
C319	283-0191-00			CAP.,FXD,CER DI:0.022UF,20%,50V	72982	8121N075Z5U0223M
C323	283-0191-00			CAP.,FXD,CER DI:0.022UF,20%,50V	72982	8121N075Z5U0223M
C333	283-0191-00			CAP.,FXD,CER DI:0.022UF,20%,50V	72982	8121N075Z5U0223M
C334	290-0512-00			CAP.,FXD,ELCTLT:22UF,20%,15V	56289	196D226X0015KA1
C340	281-0151-00			CAP.,VAR,CER DI:1-3PF,100V	72982	518-600A1-3
C342	290-0526-00			CAP.,FXD,ELCTLT:6.8UF,20%,6V	90201	TDC685M006EL
C344[1]						
C347[1]						
C356	283-0198-00			CAP.,FXD,CER DI:0.22UF,20%,50V	72982	8131N075 E224M
C357	283-0238-00			CAP.,FXD,CER DI:0.01UF,10%,50V	72982	8121N075X7R0103K
C362	290-0524-00			CAP.,FXD,ELCTLT:4.7UF,20%,10V	90201	TDC475M010EL
C366	290-0524-00			CAP.,FXD,ELCTLT:4.7UF,20%,10V	90201	TDC475M010EL
C372	283-0023-00			CAP.,FXD,CER DI:0.1UF,+80-20%,12V	91418	MX0104Z1205R5
C382	283-0191-00			CAP.,FXD,CER DI:0.022UF,20%,50V	72982	8121N075Z5U0223M
C401[1]						
C403	290-0512-00	B010100	B109999X	CAP.,FXD,ELCTLT:22UF,20%,15V	56289	196D226X0015KA1
C405[1]						
C407	283-0154-00			CAP.,FXD,CER DI:22PF,5%,50V	72982	8111B061C0G220J
C419	290-0527-00			CAP.,FXD,ELCTLT:15UF,20%,20V	90201	TDC156M020FL
C421[1]						
C423	290-0512-00	B010100	B109999X	CAP.,FXD,ELCTLT:22UF,20%,15V	56289	196D226X0015KA1
C425[1]						
C427	283-0154-00			CAP.,FXD,CER DI:22PF,5%,50V	72982	8111B061C0G220J
C428	283-0191-00	B010100	B039999X	CAP.,FXD,CER DI:0.022UF,20%,50V	72982	8121N075Z5U0223M
C430	283-0000-00			CAP.,FXD,CER DI:0.001UF,+100-0%,500V	72982	831-516E102P
C458	281-0613-00			CAP.,FXD,CER DI:10PF,+/-1PF,200V	72982	374-001C0G0100F
C466	281-0629-00			CAP.,FXD,CER DI:33PF,5%,600V	72982	308-000C0G0330J
C502[1]						
C503	290-0512-00			CAP.,FXD,ELCTLT:22UF,20%,15V	56289	196D226X0015KA1
C505[1]						
C512	290-0512-00			CAP.,FXD,ELCTLT:22UF,20%,15V	56289	196D226X0015KA1
C518	283-0191-00			CAP.,FXD,CER DI:0.022UF,20%,50V	72982	8121N075Z5U0223M
C521[1]						
C523	283-0191-00	B010100	B109999X	CAP.,FXD,CER DI:0.022UF,20%,50V	72982	8121N075Z5U0223M
C525[1]						
C532	290-0512-00			CAP.,FXD,ELCTLT:22UF,20%,15V	56289	196D226X0015KA1
C538	283-0191-00			CAP.,FXD,CER DI:0.022UF,20%,50V	72982	8121N075Z5U0223M
C542	283-0191-00			CAP.,FXD,CER DI:0.022UF,20%,50V	72982	8121N075Z5U0223M
C543	283-0156-00			CAP.,FXD,CER DI:1000PF,+100-0%,200V	72982	8111A208Z5U0102Z
C545	281-0700-00			CAP.,FXD,CER DI:3.3PF,10%,200V	72982	374-001S3B0339K
C546	283-0181-00	XB090000		CAP.,FXD,CER DI:1.8PF,10%,100V	72982	8101A108C0K189B
C548	290-0512-00			CAP.,FXD,ELCTLT:22UF,20%,15V	56289	196D226X0015KA1
C549	283-0156-00			CAP.,FXD,CER DI:1000PF,+100-0%,200V	72982	8111A208Z5U0102Z

[1] Part of Circuit Board.

http://manoman.sqhill.com

Ckt No.	Tektronix Part No.	Serial/Model No. Eff	Dscont	Name & Description	Mfr Code	Mfr Part Number
C556	283-0140-00			CAP.,FXD,CER DI:4.7PF,5%,50V	72982	8101E003A479C
C557	283-0638-00			CAP.,FXD,MICA D:130PF,1%,100V	00853	D151E131F0
C563	281-0616-00	B010100	B089999	CAP.,FXD,CER DI:6.8PF,+/-0.5PF,200V	72982	374-001C0H0689D
C563	281-0613-00	B090000	B149999	CAP.,FXD,CER DI:10PF,+/-1PF,200V	72982	374-001C0G0100F
C563	281-0650-00	B150000		CAP.,FXD,CER DI:18PF,10%,200V	72982	374-001C0H0180K
C565	281-0616-00	B010100	B089999	CAP.,FXD,CER DI:6.8PF,+/-0.5PF,200V	72982	374-001C0H0689D
C565	281-0613-00	B090000	B149999	CAP.,FXD,CER DI:10PF,+/-1PF,200V	72982	374-001C0G0100F
C565	281-0650-00	B150000		CAP.,FXD,CER DI:18PF,10%,200V	72982	374-001C0H0180K
C568	281-0552-00			CAP.,FXD,CER DI:25PF,5%,500V	72982	301-000P2G0250J
C572	283-0604-00			CAP.,FXD,MICA D:304PF,2%,300V	00853	D153F3040G0
C579	281-0552-00			CAP.,FXD,CER DI:25PF,5%,500V	72982	301-000P2G0250J
C581	290-0512-00			CAP.,FXD,ELCTLT:22UF,20%,15V	56289	196D226X0015KA1
C583	290-0512-00			CAP.,FXD,ELCTLT:22UF,20%,15V	56289	196D226X0015KA1
C585	290-0512-00			CAP.,FXD,ELCTLT:22UF,20%,15V	56289	196D226X0015KA1
C601	283-0156-00			CAP.,FXD,CER DI:1000PF,+100-0%,200V	72982	8111A208Z5U0102Z
C606	283-0177-00			CAP.,FXD,CER DI:1UF,+80-20%,25V	72982	8131N039 E 105Z
C607	283-0326-00			CAP.,FXD,CER DI:.082UF,10%,50V	16546	CW20C823K
C608	283-0238-00			CAP.,FXD,CER DI:0.01UF,10%,50V	72982	8121N075X7R0103K
C609	283-0176-00			CAP.,FXD,CER DI:0.0022UF,20%,50V	72982	8121M050W5R222M
C613	283-0182-00			CAP.,FXD,CER DI:51PF,5%,400V	72982	8110N400C0G510J
C614	283-0182-00			CAP.,FXD,CER DI:51PF,5%,400V	72982	8110N400C0G510J
C615	281-0158-00			CAP.,VAR,CER DI:7-45PF,50V	73899	DVJ-5006
C617	281-0122-00			CAP.,VAR,CER DI:2.5-9PF,100V	72982	518-000A2.5-9
C621[1]						
C624	283-0191-00			CAP.,FXD,CER DI:0.022UF,20%,50V	72982	8121N075Z5U0223M
C625[1]						
C633	283-0000-00			CAP.,FXD,CER DI:0.001UF,+100-0%,500V	72982	831-516E102P
C642[1]						
C644	283-0181-00			CAP.,FXD,CER DI:1.8PF,10%,100V	72982	8101A108C0K189B
C647[1]						
C648	283-0191-00			CAP.,FXD,CER DI:0.022UF,20%,50V	72982	8121N075Z5U0223M
C649	283-0191-00			CAP.,FXD,CER DI:0.022UF,20%,50V	72982	8121N075Z5U0223M
C652	283-0725-00			CAP.,FXD,MICA D:214PF,1%,500V	00853	D15-5E2140F0
C654	283-0725-00			CAP.,FXD,MICA D:214PF,1%,500V	00853	D15-5E2140F0
C655	283-0647-00			CAP.,FXD,MICA D:70PF,1%,100V	00853	D151E700F0
C656	283-0647-00			CAP.,FXD,MICA D:70PF,1%,100V	00853	D151E700F0
C657[1]						
C658[1]						
C662[1]						
C663	283-0191-00			CAP.,FXD,CER DI:0.022UF,20%,50V	72982	8121N075Z5U0223M
C667	283-0191-00			CAP.,FXD,CER DI:0.022UF,20%,50V	72982	8121N075Z5U0223M
C669[1]						
C684	290-0534-00	B010100	B142339X	CAP.,FXD,ELCTLT:1UF,20%,35V	56289	196D105X0035HA1
C695	283-0178-00			CAP.,FXD,CER DI:0.1UF,+80-20%,100V	72982	8131N145 E 104Z
C696	290-0517-00			CAP.,FXD,ELCTLT:6.8UF,20%,35V	56289	196D685X0035KA1
C697	290-0527-00			CAP.,FXD,ELCTLT:15UF,20%,20V	90201	TDC156M020FL
C698	290-0527-00			CAP.,FXD,ELCTLT:15UF,20%,20V	90201	TDC156M020FL
C699	283-0238-00	XB030000		CAP.,FXD,CER DI:0.01UF,10%,50V	72982	8121N075X7R0103K
C701	283-0156-00			CAP.,FXD,CER DI:1000PF,+100-0%,200V	72982	8111A208Z5U0102Z
C702	281-0578-00			CAP.,FXD,CER DI:18PF,5%,500V	72982	301-050C0G0180J
C703	283-0076-00	XB020000		CAP.,FXD,CER DI:27PF,10%,500V	56289	40C287A2
C704	283-0644-00			CAP.,FXD,MICA D:150PF,1%,500V	00853	D151E151F0
C705	283-0334-00	B010100	B059999	CAP.,FXD,CER DI:130PF,2%,500V	72982	8121N502A131G

[1]Part of Circuit Board.

http://manoman.sqhill.com

Ckt No.	Tektronix Part No.	Serial/Model No. Eff	Dscont	Name & Description	Mfr Code	Mfr Part Number
C705	283-0618-00	B060000		CAP.,FXD,MICA D:130PF,2%,300V	00853	D155E131G0
C706	283-0068-00			CAP.,FXD,CER DI:0.01UF,+100-0%,500V	56289	19C241
C707	283-0159-00			CAP.,FXD,CER DI:18PF,5%,50V	72982	8111B065C0G0180J
C711	283-0140-00			CAP.,FXD,CER DI:4.7PF,5%,50V	72982	8101E003A479C
C714	283-0204-00			CAP.,FXD,CER DI:0.01UF,20%,50V	72982	8121N075Z5U0103M
C715	283-0204-00			CAP.,FXD,CER DI:0.01UF,20%,50V	72982	8121N075Z5U0103M
C728	283-0204-00			CAP.,FXD,CER DI:0.01UF,20%,50V	72982	8121N075Z5U0103M
C731[1]						
C733	283-0159-00			CAP.,FXD,CER DI:18PF,5%,50V	72982	8111B065C0G0180J
C734	283-0108-00	XB050000		CAP.,FXD,CER DI:220PF,10%,200V	56289	272C13
C735[1]						
C744	283-0159-00			CAP.,FXD,CER DI:18PF,5%,50V	72982	8111B065C0G0180J
C746[1]						
C748[1]						
C750	283-0204-00			CAP.,FXD,CER DI:0.01UF,20%,50V	72982	8121N075Z5U0103M
C752	283-0025-00			CAP.,FXD,CER DI:500PF,5%,500V	91418	JE501J5019S9
C756	283-0204-00			CAP.,FXD,CER DI:0.01UF,20%,50V	72982	8121N075Z5U0103M
C761	283-0185-00			CAP.,FXD,CER DI:2.5PF,5%,50V	72982	8101A058A259B
C762	283-0185-00			CAP.,FXD,CER DI:2.5PF,5%,50V	72982	8101A058A259B
C763	283-0185-00			CAP.,FXD,CER DI:2.5PF,5%,50V	72982	8101A058A259B
C768	283-0060-00			CAP.,FXD,CER DI:100PF,5%,200V	72982	855-535U2J101J
C769	281-0519-00			CAP.,FXD,CER DI:47PF,+/-4.7PF,500V	72982	308-000C0G0470K
C772	281-0519-00			CAP.,FXD,CER DI:47PF,+/-4.7PF,500V	72982	308-000C0G0470K
C785	290-0512-00			CAP.,FXD,ELCTLT:22UF,20%,15V	56289	196D226X0015KA1
C787	290-0534-00			CAP.,FXD,ELCTLT:1UF,20%,35V	56289	196D105X0035HA1
C811	290-0512-00			CAP.,FXD,ELCTLT:22UF,20%,15V	56289	196D226X0015KA1
C821	283-0076-00	B010100	B010209	CAP.,FXD,CER DI:27PF,10%,500V	56289	40C287A2
C821	281-0519-00	B010210		CAP.,FXD,CER DI:47PF,+/-4.7PF,500V	72982	308-000C0G0470K
C824	283-0076-00			CAP.,FXD,CER DI:27PF,10%,500V	56289	40C287A2
C835	283-0204-00			CAP.,FXD,CER DI:0.01UF,20%,50V	72982	8121N075Z5U0103M
C837[2]	283-0185-00	B010100	B069999X	CAP.,FXD,CER DI:2.5PF,5%,50V	72982	8101A058A259B
C838[2]	283-0156-00			CAP.,FXD,CER DI:1000PF,+100-0%,200V	72982	8111A208Z5U0102Z
C839[2]	283-0156-00			CAP.,FXD,CER DI:1000PF,+100-0%,200V	72982	8111A208Z5U0102Z
C843	283-0204-00			CAP.,FXD,CER DI:0.01UF,20%,50V	72982	8121N075Z5U0103M
C844	290-0527-00			CAP.,FXD,ELCTLT:15UF,20%,20V	90201	TDC156M020FL
C845	290-0512-00			CAP.,FXD,ELCTLT:22UF,20%,15V	56289	196D226X0015KA1
C846	290-0512-00			CAP.,FXD,ELCTLT:22UF,20%,15V	56289	196D226X0015KA1
C847	290-0512-00			CAP.,FXD,ELCTLT:22UF,20%,15V	56289	196D226X0015KA1
C848[2]	283-0204-00			CAP.,FXD,CER DI:0.01UF,20%,50V	72982	8121N075Z5U0103M
C849[2]	290-0512-00			CAP.,FXD,ELCTLT:22UF,20%,15V	56289	196D226X0015KA1
C853	283-0111-00			CAP.,FXD,CER DI:0.1UF,20%,50V	72982	8121-N088Z5U104M
C856	281-0628-00	B010100	B010285	CAP.,FXD,CER DI:15PF,5%,500V	72982	301-000C0G0150J
C856	281-0564-00	B010286		CAP.,FXD,CER DI:24PF,5%,500V	72982	301-000C0G0240J
C861	290-0512-00	XB010435		CAP.,FXD,ELCTLT:22UF,20%,15V	56289	196D226X0015KA1
C862	283-0003-00			CAP.,FXD,CER DI:0.01UF,+80-20%,150V	72982	855-558Z5U-103Z
C863	281-0512-00			CAP.,FXD,CER DI:27PF,+/-2.7PF,500V	72982	308-000C0G0270K
C867	281-0628-00			CAP.,FXD,CER DI:15PF,5%,500V	72982	301-000C0G0150J
C869	281-0589-00			CAP.,FXD,CER DI:170PF,5%,500V	72982	301000Z5D171J
C874	281-0504-00			CAP.,FXD,CER DI:10PF,+/-1PF,500V	72982	301-055C0G0100F
C876	281-0550-00			CAP.,FXD,CER DI:120PF,10%,500V	04222	7001-1373
C877	281-0184-00			CAP.,VAR,PLSTC:2-18PF,500VDC	34553	2222-809-05003
C878	283-0629-00			CAP.,FXD,MICA D:62PF,1%,500V	00853	D105E620F0
C879	283-0004-00			CAP.,FXD,CER DI:0.02UF,+80-20%,150V	72982	855-558-Z5V0203Z

[1]Part of Circuit Board.
[2]485 only.

http://manoman.sqhill.com

Ckt No.	Tektronix Part No.	Serial/Model No. Eff	Dscont	Name & Description	Mfr Code	Mfr Part Number
C881	283-0663-00			CAP.,FXD,MICA D:16.8PF,+/-0.5PF,500V	00853	D155C16.8D0
C882	281-0182-00			CAP.,VAR,PLSTC:1.8-10PF,500V	34553	2222-809-05002
C883	283-0239-00			CAP.,FXD,CER DI:0.022UF,10%,50V	72982	8131N075C223K
C894	283-0004-00			CAP.,FXD,CER DI:0.02UF,+80-20%,150V	72982	855-558-Z5V0203Z
C900	281-0578-00			CAP.,FXD,CER DI:18PF,5%,500V	72982	301-050C0G0180J
C902	283-0059-00	B010100	B010434	CAP.,FXD,CER DI:1UF,+80-20%,25V	72982	8141N037Z5U0105Z
C902	290-0512-00	B010435		CAP.,FXD,ELCTLT:22UF,20%,15V	56289	196D226X0015KA1
C911	283-0003-00	B010100	B010434	CAP.,FXD,CER DI:0.01UF,+80-20%,150V	72982	855-558Z5U-103Z
C911	290-0512-00	B010435		CAP.,FXD,ELCTLT:22UF,20%,15V	56289	196D226X0015KA1
C912	283-0003-00	B010100	B010434X	CAP.,FXD,CER DI:0.01UF,+80-20%,150V	72982	855-558Z5U-103Z
C917	283-0004-00			CAP.,FXD,CER DI:0.02UF,+80-20%,150V	72982	855-558-Z5V0203Z
C921	283-0004-00			CAP.,FXD,CER DI:0.02UF,+80-20%,150V	72982	855-558-Z5V0203Z
C932	281-0578-00			CAP.,FXD,CER DI:18PF,5%,500V	72982	301-050C0G0180J
C938	283-0000-00			CAP.,FXD,CER DI:0.001UF,+100-0%,500V	72982	831-516E102P
C943	283-0059-00			CAP.,FXD,CER DI:1UF,+80-20%,25V	72982	8141N037Z5U0105Z
C945	283-0059-00			CAP.,FXD,CER DI:1UF,+80-20%,25V	72982	8141N037Z5U0105Z
C962	283-0004-00	B010100	B010434	CAP.,FXD,CER DI:0.02UF,+80-20%,150V	72982	855-558-Z5V0203Z
C962	290-0512-00	B010435		CAP.,FXD,ELCTLT:22UF,20%,15V	56289	196D226X0015KA1
C965	290-0519-00			CAP.,FXD,ELCTLT:100UF,20%,20V	90201	TDC107M020WLD
C1002	281-0578-00			CAP.,FXD,CER DI:18PF,5%,500V	72982	301-050C0G0180J
C1003	283-0076-00	XB020000		CAP.,FXD,CER DI:27PF,10%,500V	56289	40C287A2
C1004	283-0644-00			CAP.,FXD,MICA D:150PF,1%,500V	00853	D151E151F0
C1005	283-0334-00	B010100	B059999	CAP.,FXD,CER DI:130PF,2%,500V	72982	8121N502A131G
C1005	283-0618-00	B060000		CAP.,FXD,MICA D:130PF,2%,300V	00853	D155E131G0
C1006	283-0068-00			CAP.,FXD,CER DI:0.01UF,+100-0%,500V	56289	19C241
C1007	283-0159-00			CAP.,FXD,CER DI:18PF,5%,50V	72982	8111B065C0G0180J
C1011	283-0140-00			CAP.,FXD,CER DI:4.7PF,5%,50V	72982	8101E003A479C
C1012	283-0204-00			CAP.,FXD,CER DI:0.01UF,20%,50V	72982	8121N075Z5U0103M
C1013	283-0204-00			CAP.,FXD,CER DI:0.01UF,20%,50V	72982	8121N075Z5U0103M
C1014	283-0204-00			CAP.,FXD,CER DI:0.01UF,20%,50V	72982	8121N075Z5U0103M
C1016	283-0260-00			CAP.,FXD,CER DI:5.6PF,5%,200V	72982	8111B200C0G569C
C1027	283-0204-00			CAP.,FXD,CER DI:0.01UF,20%,50V	72982	8121N075Z5U0103M
C1029	283-0204-00			CAP.,FXD,CER DI:0.01UF,20%,50V	72982	8121N075Z5U0103M
C1030	283-0157-00			CAP.,FXD,CER DI:7PF,5%,500V	72982	8111B064C0H0709J
C1031[1]						
C1034[1]						
C1035	283-0108-00	XB050000		CAP.,FXD,CER DI:220PF,10%,200V	56289	272C13
C1040	283-0204-00			CAP.,FXD,CER DI:0.01UF,20%,50V	72982	8121N075Z5U0103M
C1041[1]						
C1043	283-0191-00	XB070000		CAP.,FXD,CER DI:0.022UF,20%,50V	72982	8121N075Z5U0223M
C1044[1]						
C1045	283-0159-00			CAP.,FXD,CER DI:18PF,5%,50V	72982	8111B065C0G0180J
C1046	283-0191-00	XB070000		CAP.,FXD,CER DI:0.022UF,20%,50V	72982	8121N075Z5U0223M
C1052	283-0025-00			CAP.,FXD,CER DI:500PF,5%,500V	91418	JE501J5019S9
C1061	283-0185-00			CAP.,FXD,CER DI:2.5PF,5%,50V	72982	8101A058A259B
C1063	283-0185-00			CAP.,FXD,CER DI:2.5PF,5%,50V	72982	8101A058A259B
C1064	283-0185-00			CAP.,FXD,CER DI:2.5PF,5%,50V	72982	8101A058A259B
C1071	283-0004-00			CAP.,FXD,CER DI:0.02UF,+80-20%,150V	72982	855-558-Z5V0203Z
C1072	283-0115-00			CAP.,FXD,CER DI:47PF,5%,200V	72982	805-509C0G470J
C1079	283-0115-00			CAP.,FXD,CER DI:47PF,5%,200V	72982	805-509C0G470J
C1099	290-0527-00			CAP.,FXD,ELCTLT:15UF,20%,20V	90201	TDC156M020FL
C1101	290-0580-00			CAP.,FXD,ELCTLT:0.27UF,20%,50V	56289	196D274X0050HA1
C1121	283-0113-00			CAP.,FXD,CER DI:56PF,1%,500V	72982	851-559A560F

[1] Part of Circuit Board.

http://manoman.sqhill.com

Ckt No.	Tektronix Part No.	Serial/Model No. Eff	Dscont	Name & Description	Mfr Code	Mfr Part Number
C1130	290-0527-00			CAP.,FXD,ELCTLT:15UF,20%,20V	90201	TDC156M020FL
C1131	290-0527-00			CAP.,FXD,ELCTLT:15UF,20%,20V	90201	TDC156M020FL
C1132	283-0111-00			CAP.,FXD,CER DI:0.1UF,20%,50V	72982	8121-N088Z5U104M
C1133	290-0512-00			CAP.,FXD,ELCTLT:22UF,20%,15V	56289	196D226X0015KA1
C1134	290-0512-00			CAP.,FXD,ELCTLT:22UF,20%,15V	56289	196D226X0015KA1
C1136	283-0111-00			CAP.,FXD,CER DI:0.1UF,20%,50V	72982	8121-N088Z5U104M
C1137	290-0512-00			CAP.,FXD,ELCTLT:22UF,20%,15V	56289	196D226X0015KA1
C1139	290-0527-00			CAP.,FXD,ELCTLT:15UF,20%,20V	90201	TDC156M020FL
C1156	283-0004-00			CAP.,FXD,CER DI:0.02UF,+80-20%,150V	72982	855-558-Z5V0203Z
C1164	283-0004-00			CAP.,FXD,CER DI:0.02UF,+80-20%,150V	72982	855-558-Z5V0203Z
C1166	283-0004-00			CAP.,FXD,CER DI:0.02UF,+80-20%,150V	72982	855-558-Z5V0203Z
C1171	283-0004-00			CAP.,FXD,CER DI:0.02UF,+80-20%,150V	72982	855-558-Z5V0203Z
C1172	281-0604-00			CAP.,FXD,CER DI:2.2PF,+/-0.25PF,500V	72982	301-000C0J0229C
C1174	283-0004-00			CAP.,FXD,CER DI:0.02UF,+80-20%,150V	72982	855-558-Z5V0203Z
C1177	281-0529-00			CAP.,FXD,CER DI:1.5PF,+/-0.25PF,500V	72982	301-000C0K0159C
C1181	283-0004-00			CAP.,FXD,CER DI:0.02UF,+80-20%,150V	72982	855-558-Z5V0203Z
C1182	281-0604-00			CAP.,FXD,CER DI:2.2PF,+/-0.25PF,500V	72982	301-000C0J0229C
C1184	283-0004-00			CAP.,FXD,CER DI:0.02UF,+80-20%,150V	72982	855-558-Z5V0203Z
C1187	281-0619-00			CAP.,FXD,CER DI:1.2PF,+/-0.1PF,200V	72982	374-000C0K0129B
C1190	281-0166-00			CAP.,VAR,AIR DI:1.9-15.7PF,250V	74970	187-0109-005
C1192	283-0004-00			CAP.,FXD,CER DI:0.02UF,+80-20%,150V	72982	855-558-Z5V0203Z
C1199	290-0135-00			CAP.,FXD,ELCTLT:15UF,20%,20V	56289	150D156X0020B2
C1204	281-0628-00			CAP.,FXD,CER DI:15PF,5%,500V	72982	301-000C0G0150J
C1206	283-0111-00			CAP.,FXD,CER DI:0.1UF,20%,50V	72982	8121-N088Z5U104M
C1214	283-0003-00			CAP.,FXD,CER DI:0.01UF,+80-20%,150V	72982	855-558Z5U-103Z
C1217	281-0601-00			CAP.,FXD,CER DI:7.5PF,500V	72982	301-000C0H0759D
C1219	281-0589-00			CAP.,FXD,CER DI:170PF,5%,500V	72982	301000Z5D171J
C1229	281-0512-00			CAP.,FXD,CER DI:27PF,+/-2.7PF,500V	72982	308-000C0G0270K
C1232	283-0104-00			CAP.,FXD,CER DI:2000PF,5%,500V	72982	811-565B202J
C1235	281-0763-00	XB144450		CAP.,FXD,CER DI:47PF,10%,100V	72982	8035D9AADC0G470K
C1238	281-0528-00	B010100	B109999X	CAP.,FXD,CER DI:82PF,+/-8.2PF,500V	72982	301-000U2M0820K
C1241	281-0550-00			CAP.,FXD,CER DI:120PF,10%,500V	04222	7001-1373
C1242	281-0184-00			CAP.,VAR,PLSTC:2-18PF,500VDC	34553	2222-809-05003
C1243	283-0633-00			CAP.,FXD,MICA D:77PF,1%,100V	00853	D151E770F0
C1247	281-0658-00			CAP.,FXD,CER DI:6.2PF,+/-0.25PF,500V	72982	301-000C0H0629C
C1248	281-0178-00			CAP.,VAR,PLSTC:1-3.5PF,500V	34553	2222-809-05001
C1254	283-0004-00			CAP.,FXD,CER DI:0.02UF,+80-20%,150V	72982	855-558-Z5V0203Z
C1263	281-0564-00			CAP.,FXD,CER DI:24PF,5%,500V	72982	301-000C0G0240J
C1268	283-0000-00			CAP.,FXD,CER DI:0.001UF,+100-0%,500V	72982	831-516E102P
C1301	283-0004-00			CAP.,FXD,CER DI:0.02UF,+80-20%,150V	72982	855-558-Z5V0203Z
C1335	281-0622-00			CAP.,FXD,CER DI:47PF,1%,500V	72982	308-000C0G0470F
C1336	283-0111-00			CAP.,FXD,CER DI:0.1UF,20%,50V	72982	8121-N088Z5U104M
C1347	283-0647-00			CAP.,FXD,MICA D:70PF,1%,100V	00853	D151E700F0
C1364	281-0166-00			CAP.,VAR,AIR DI:1.9-15.7PF,250V	74970	187-0109-005
C1366	283-0156-00	XB020000		CAP.,FXD,CER DI:1000PF,+100-0%,200V	72982	8111A208Z5U0102Z
C1371	283-0004-00			CAP.,FXD,CER DI:0.02UF,+80-20%,150V	72982	855-558-Z5V0203Z
C1372	283-0168-00			CAP.,FXD,CER DI:12PF,5%,100V	72982	8111-100C0G120J
C1374	283-0114-00			CAP.,FXD,CER DI:0.0015UF,5%,200V	72982	805-509B152J
C1402	283-0004-00			CAP.,FXD,CER DI:0.02UF,+80-20%,150V	72982	855-558-Z5V0203Z
C1404[1]	285-0908-02			CAP.,FXD,PLSTC:0.01UF,3%,50V	80009	285-0908-02
C1405[1]	285-0840-02			CAP.,FXD,PLSTC:1UF,3.5%,35V	80009	285-0840-02
C1431	281-0580-00			CAP.,FXD,CER DI:470PF,10%,500V	04222	7001-1374
C1432	281-0589-00			CAP.,FXD,CER DI:170PF,5%,500V	72982	301000Z5D171J

[1]Available as a matched set, part number 295-0147-00. The letter suffix and the tolerance should be the same for all of the timing capacitors in the assembly.

http://manoman.sqhill.com

Ckt No.	Tektronix Part No.	Serial/Model No. Eff	Dscont	Name & Description	Mfr Code	Mfr Part Number
C1433	285-0651-01			CAP.,FXD,PLSTC:1700PF,5%,100V	56289	410P105
C1434	285-0566-00			CAP.,FXD,PLSTC:0.022UF,10%,200V	56289	410P22392
C1435	285-0919-00			CAP.,FXD,PLSTC:0.22UF,10%,100V	56289	LP66A1B224K002
C1436	290-0523-00			CAP.,FXD,ELCTLT:2.2UF,20%,20V	56289	196D225X0020HA1
C1437	290-0512-00			CAP.,FXD,ELCTLT:22UF,20%,15V	56289	196D226X0015KA1
C1442[1]	285-0752-01			CAP.,FXD,PLSTC:1UF,3.5%,50V	80009	285-0752-01
C1443[1]	285-0753-04			CAP.,FXD,PLSTC:0.01UF,3.5%,100V	80009	285-0753-04
C1482	290-0167-00			CAP.,FXD,ELCTLT:10UF,20%,15V	56289	150D106X0015B2
C1484	290-0534-00			CAP.,FXD,ELCTLT:1UF,20%,35V	56289	196D105X0035HA1
C1522	281-0603-00			CAP.,FXD,CER DI:39PF,5%,500V	72982	308-000C0G0390J
C1533	283-0003-00			CAP.,FXD,CER DI:0.01UF,+80-20%,150V	72982	855-558Z5U-103Z
C1537	290-0580-00			CAP.,FXD,ELCTLT:0.27UF,20%,50V	56289	196D274X0050HA1
C1538	290-0536-00			CAP.,FXD,ELCTLT:10UF,20%,25V	90201	TDC106M025FL
C1551	281-0512-00			CAP.,FXD,CER DI:27PF,+/-2.7PF,500V	72982	308-000C0G0270K
C1552	281-0549-00			CAP.,FXD,CER DI:68PF,10%,500V	72982	301-000U2J0680K
C1558	290-0523-00			CAP.,FXD,ELCTLT:2.2UF,20%,20V	56289	196D225X0020HA1
C1562	283-0000-00			CAP.,FXD,CER DI:0.001UF,+100-0%,500V	72982	831-516E102P
C1578	290-0512-00			CAP.,FXD,ELCTLT:22UF,20%,15V	56289	196D226X0015KA1
C1579	290-0524-00			CAP.,FXD,ELCTLT:4.7UF,20%,10V	90201	TDC475M010EL
C1586	283-0668-00			CAP.,FXD,MICA D:184PF,1%,500V	00853	D155F1840F0
C1588	283-0000-00			CAP.,FXD,CER DI:0.001UF,+100-0%,500V	72982	831-516E102P
C1600	283-0092-00			CAP.,FXD,CER DI:0.03UF,+80-20%,200V	72982	845-534E303Z
C1601	283-0105-00			CAP.,FXD,CER DI:0.01UF,+80-20%,2000V	56289	41C316
C1602	283-0013-00			CAP.,FXD,CER DI:0.01UF,+100-0%,1000V	56289	33C29A7
C1603	283-0071-00			CAP.,FXD,CER DI:0.0068UF,+80-30%,5000V	56289	45C10A1
C1611	283-0327-00			CAP.,FXD,CER DI:1000PF,+80-20%,4000V	72982	3904BW100C102Z
C1612	283-0071-00			CAP.,FXD,CER DI:0.0068UF,+80-30%,5000V	56289	45C10A1
C1619	285-0572-00			CAP.,FXD,PLSTC:0.1UF,200V	84411	TEK44-10402
C1621	283-0000-00			CAP.,FXD,CER DI:0.001UF,+100-0%,500V	72982	831-516E102P
C1622	283-0003-00			CAP.,FXD,CER DI:0.01UF,+80-20%,150V	72982	855-558Z5U-103Z
C1627	283-0060-00			CAP.,FXD,CER DI:100PF,5%,200V	72982	855-535U2J101J
C1633	283-0327-00			CAP.,FXD,CER DI:1000PF,+80-20%,4000V	72982	3904BW100C102Z
C1646	283-0327-00			CAP.,FXD,CER DI:1000PF,+80-20%,4000V	72982	3904BW100C102Z
C1651	283-0327-00			CAP.,FXD,CER DI:1000PF,+80-20%,4000V	72982	3904BW100C102Z
C1652	283-0327-00			CAP.,FXD,CER DI:1000PF,+80-20%,4000V	72982	3904BW100C102Z
C1653	283-0000-00			CAP.,FXD,CER DI:0.001UF,+100-0%,500V	72982	831-516E102P
C1656	283-0001-00			CAP.,FXD,CER DI:0.005UF,+100-0%,500V	72982	831-559E502P
C1660	285-0572-00			CAP.,FXD,PLSTC:0.1UF,200V	84411	TEK44-10402
C1663	283-0327-00			CAP.,FXD,CER DI:1000PF,+80-20%,4000V	72982	3904BW100C102Z
C1664	283-0327-00			CAP.,FXD,CER DI:1000PF,+80-20%,4000V	72982	3904BW100C102Z
C1665	283-0041-00			CAP.,FXD,CER DI:0.0033UF,5%,500V	72982	841-541B332J
C1667	283-0327-00			CAP.,FXD,CER DI:1000PF,+80-20%,4000V	72982	3904BW100C102Z
C1681	283-0327-00			CAP.,FXD,CER DI:1000PF,+80-20%,4000V	72982	3904BW100C102Z
C1684	283-0327-00			CAP.,FXD,CER DI:1000PF,+80-20%,4000V	72982	3904BW100C102Z
C1687	283-0327-00			CAP.,FXD,CER DI:1000PF,+80-20%,4000V	72982	3904BW100C102Z
C1723	281-0564-00			CAP.,FXD,CER DI:24PF,5%,500V	72982	301-000C0G0240J
C1725	283-0317-00			CAP.,FXD,CER DI:1PF,+/-0.1PF,500V	72982	861-000C0G109B
C1728	283-0317-00			CAP.,FXD,CER DI:1PF,+/-0.1PF,500V	72982	861-000C0G109B
C1729	281-0512-00			CAP.,FXD,CER DI:27PF,+/-2.7PF,500V	72982	308-000C0G0270K
C1732	283-0001-00			CAP.,FXD,CER DI:0.005UF,+100-0%,500V	72982	831-559E502P
C1738	281-0523-00			CAP.,FXD,CER DI:100PF,+/-20PF,500V	72982	301-000U2M0101M
C1739	283-0003-00	B010100	B010319	CAP.,FXD,CER DI:0.01UF,+80-20%,150V	72982	855-558Z5U-103Z
C1739	283-0068-00	B010320		CAP.,FXD,CER DI:0.01UF,+100-0%,500V	56289	19C241

[1] Available as a matched set, part number 295-0147-00. The letter suffix and the tolerance should be the same for all of the timing capacitors in the assembly.

http://manoman.sqhill.com

Ckt No.	Tektronix Part No.	Serial/Model No. Eff	Dscont	Name & Description	Mfr Code	Mfr Part Number
C1742	283-0004-00			CAP.,FXD,CER DI:0.02UF,+80-20%,150V	72982	855-558-Z5V0203Z
C1743	281-0526-00	B010100	B139999	CAP.,FXD,CER DI:1.5PF,+/-0.5PF,500V	72982	301-000S2K0159D
C1743	281-0609-00	B140000		CAP.,FXD,CER DI:1PF,+/-0.1PF,500V	72982	374-005C0K0109B
C1744	283-0004-00			CAP.,FXD,CER DI:0.02UF,+80-20%,150V	72982	855-558-Z5V0203Z
C1748	290-0527-00			CAP.,FXD,ELCTLT:15UF,20%,20V	90201	TDC156M020FL
C1749	283-0004-00			CAP.,FXD,CER DI:0.02UF,+80-20%,150V	72982	855-558-Z5V0203Z
C1751	283-0004-00			CAP.,FXD,CER DI:0.02UF,+80-20%,150V	72982	855-558-Z5V0203Z
C1755	283-0004-00			CAP.,FXD,CER DI:0.02UF,+80-20%,150V	72982	855-558-Z5V0203Z
C1756	283-0004-00			CAP.,FXD,CER DI:0.02UF,+80-20%,150V	72982	855-558-Z5V0203Z
C1762	281-0153-00			CAP.,VAR,AIR DI:1.7-10PF,250V	74970	187-0106-005
C1764	281-0546-00			CAP.,FXD,CER DI:330PF,10%,500V	04222	7001-1380
C1765	281-0153-00			CAP.,VAR,AIR DI:1.7-10PF,250V	74970	187-0106-005
C1766	281-0661-00			CAP.,FXD,CER DI:0.8PF,+/-0.1PF,500V	72982	301-000C0K0808B
C1771	283-0004-00			CAP.,FXD,CER DI:0.02UF,+80-20%,150V	72982	855-558-Z5V0203Z
C1774	283-0004-00			CAP.,FXD,CER DI:0.02UF,+80-20%,150V	72982	855-558-Z5V0203Z
C1775	281-0622-00			CAP.,FXD,CER DI:47PF,1%,500V	72982	308-000C0G0470F
C1779	281-0550-00			CAP.,FXD,CER DI:120PF,10%,500V	04222	7001-1373
C1781	283-0317-00			CAP.,FXD,CER DI:1PF,+/-0.1PF,500V	72982	861-000C0G109B
C1782	281-0627-00			CAP.,FXD,CER DI:1PF,+/-0.25PF,500V	72982	301-000C0K0109C
C1786	283-0004-00			CAP.,FXD,CER DI:0.02UF,+80-20%,150V	72982	855-558-Z5V0203Z
C1787	283-0004-00			CAP.,FXD,CER DI:0.02UF,+80-20%,150V	72982	855-558-Z5V0203Z
C1788	283-0004-00			CAP.,FXD,CER DI:0.02UF,+80-20%,150V	72982	855-558-Z5V0203Z
C1792	283-0068-00			CAP.,FXD,CER DI:0.01UF,+100-0%,500V	56289	19C241
C1796	283-0000-00			CAP.,FXD,CER DI:0.001UF,+100-0%,500V	72982	831-516E102P
C1812	283-0280-00			CAP.,FXD,CER DI:2200PF,10%,2000V	56289	29C558
C1813	283-0280-00			CAP.,FXD,CER DI:2200PF,10%,2000V	56289	29C558
C1814	283-0022-00			CAP.,FXD,CER DI:0.02UF,1400VDCAC	80009	283-0022-00
C1822	290-0483-00			CAP.,FXD,ELCTLT:430UF,+50-10%,200V	56289	36D7762
C1823	290-0483-00			CAP.,FXD,ELCTLT:430UF,+50-10%,200V	56289	36D7762
C1824	283-0057-00			CAP.,FXD,CER DI:0.1UF,+80-20%,200V	56289	274C10
C1825	283-0280-00			CAP.,FXD,CER DI:2200PF,10%,2000V	56289	29C558
C1826	285-0981-00			CAP.,FXD,PLSTC:2.0UF,10%,400V	14752	C-2176-1
C1827	283-0280-00			CAP.,FXD,CER DI:2200PF,10%,2000V	56289	29C558
C1829	283-0041-00			CAP.,FXD,CER DI:0.0033UF,5%,500V	72982	841-541B332J
C1834	290-0284-00			CAP.,FXD,ELCTLT:4.7UF,10%,35V	56289	150D475X9035B2
C1835	285-0980-00			CAP.,FXD,PLSTC:0.02UF,5%,1000V	56289	AF9A1G203J004
C1841	290-0284-00			CAP.,FXD,ELCTLT:4.7UF,10%,35V	56289	150D475X9035B2
C1848	290-0159-00			CAP.,FXD,ELCTLT:2UF,+50-10%,150V	56289	30D205F150BB9
C1849	283-0078-00			CAP.,FXD,CER DI:0.001UF,20%,500V	56289	20C114A8
C1901	290-0573-00			CAP.,FXD,ELCTLT:2.7UF,20%,50V	56289	196D275X0050JA1
C1902	283-0003-00			CAP.,FXD,CER DI:0.01UF,+80-20%,150V	72982	855-558Z5U-103Z
C1904	283-0003-00			CAP.,FXD,CER DI:0.01UF,+80-20%,150V	72982	855-558Z5U-103Z
C1912	290-0524-00			CAP.,FXD,ELCTLT:4.7UF,20%,10V	90201	TDC475M010EL
C1914	281-0523-00			CAP.,FXD,CER DI:100PF,+/-20PF,500V	72982	301-000U2M0101M
C1915	281-0523-00			CAP.,FXD,CER DI:100PF,+/-20PF,500V	72982	301-000U2M0101M
C1918	290-0523-00	B010100	B029999	CAP.,FXD,ELCTLT:2.2UF,20%,20V	56289	196D225X0020HA1
C1918	290-0573-00	B030000		CAP.,FXD,ELCTLT:2.7UF,20%,50V	56289	196D275X0050JA1
C1919	283-0000-00	B010100	B139999	CAP.,FXD,CER DI:0.001UF,+100-0%,500V	72982	831-516E102P
C1919	283-0594-00	B140000		CAP.,FXD,MICA D:0.001UF,1%,100V	00853	D151F102F0
C1921	283-0010-00			CAP.,FXD,CER DI:0.05UF,+100-20%,50V	56289	273C20
C1924	283-0178-00	B010100	B059999	CAP.,FXD,CER DI:0.1UF,+80-20%,100V	72982	8131N145 E 104Z
C1924	290-0572-00	B060000		CAP.,FXD,ELCTLT:0.1UF,20%,50V	56289	196D104X0050HA1
C1940	283-0000-00			CAP.,FXD,CER DI:0.001UF,+100-0%,500V	72982	831-516E102P

http://manoman.sqhill.com

Ckt No.	Tektronix Part No.	Serial/Model No. Eff	Dscont	Name & Description	Mfr Code	Mfr Part Number
C1943	290-0572-00			CAP.,FXD,ELCTLT:0.1UF,20%,50V	56289	196D104X0050HA1
C1944	283-0003-00			CAP.,FXD,CER DI:0.01UF,+80-20%,150V	72982	855-558Z5U-103Z
C1951	283-0003-00			CAP.,FXD,CER DI:0.01UF,+80-20%,150V	72982	855-558Z5U-103Z
C2001	290-0159-00			CAP.,FXD,ELCTLT:2UF,+50-10%,150V	56289	30D205F150BB9
C2002	290-0480-00			CAP.,FXD,ELCTLT:0.5UF,+50-10%,200V	80009	290-0480-00
C2005	290-0194-00			CAP.,FXD,ELCTLT:10UF,+50-10%,100V	56289	30D106F100DC4
C2006	290-0312-00			CAP.,FXD,ELCTLT:47UF,10%,35V	56289	150D476X9035S2
C2007	290-0312-00			CAP.,FXD,ELCTLT:47UF,10%,35V	56289	150D476X9035S2
C2008	290-0194-00			CAP.,FXD,ELCTLT:10UF,+50-10%,100V	56289	30D106F100DC4
C2009	290-0194-00			CAP.,FXD,ELCTLT:10UF,+50-10%,100V	56289	30D106F100DC4
C2011	290-0528-00			CAP.,FXD,ELCTLT:15UF,20%,50V	90201	TDC156M050WLC
C2012	290-0528-00			CAP.,FXD,ELCTLT:15UF,20%,50V	90201	TDC156M050WLC
C2013	290-0528-00			CAP.,FXD,ELCTLT:15UF,20%,50V	90201	TDC156M050WLC
C2015	290-0425-00			CAP.,FXD,ELCTLT:100UF,20%,20V	90201	THF107M020P1G
C2016	290-0425-00			CAP.,FXD,ELCTLT:100UF,20%,20V	90201	THF107M020P1G
C2018	290-0519-00			CAP.,FXD,ELCTLT:100UF,20%,20V	90201	TDC107M020WLD
C2019	290-0519-00			CAP.,FXD,ELCTLT:100UF,20%,20V	90201	TDC107M020WLD
C2021	290-0529-00			CAP.,FXD,ELCTLT:47UF,20%,20V	05397	T368C476M020AZ
C2023	290-0517-00			CAP.,FXD,ELCTLT:6.8UF,20%,35V	56289	196D685X0035KA1
C2025	290-0517-00			CAP.,FXD,ELCTLT:6.8UF,20%,35V	56289	196D685X0035KA1
C2035	290-0425-00			CAP.,FXD,ELCTLT:100UF,20%,20V	90201	THF107M020P1G
C2036	290-0425-00			CAP.,FXD,ELCTLT:100UF,20%,20V	90201	THF107M020P1G
C2038	290-0519-00			CAP.,FXD,ELCTLT:100UF,20%,20V	90201	TDC107M020WLD
C2039	290-0519-00			CAP.,FXD,ELCTLT:100UF,20%,20V	90201	TDC107M020WLD
C2042	283-0004-00			CAP.,FXD,CER DI:0.02UF,+80-20%,150V	72982	855-558-Z5V0203Z
C2043	283-0004-00			CAP.,FXD,CER DI:0.02UF,+80-20%,150V	72982	855-558-Z5V0203Z
C2045	283-0004-00			CAP.,FXD,CER DI:0.02UF,+80-20%,150V	72982	855-558-Z5V0203Z
C2046	290-0420-00			CAP.,FXD,ELCTLT:0.68UF,20%,75V	56289	150D684X0075A2
C2047	283-0003-00			CAP.,FXD,CER DI:0.01UF,+80-20%,150V	72982	855-558Z5U-103Z
C2052	283-0004-00			CAP.,FXD,CER DI:0.02UF,+80-20%,150V	72982	855-558-Z5V0203Z
C2055	290-0517-00			CAP.,FXD,ELCTLT:6.8UF,20%,35V	56289	196D685X0035KA1
C2056	290-0527-00			CAP.,FXD,ELCTLT:15UF,20%,20V	90201	TDC156M020FL
C2062	283-0004-00			CAP.,FXD,CER DI:0.02UF,+80-20%,150V	72982	855-558-Z5V0203Z
C2066	290-0527-00			CAP.,FXD,ELCTLT:15UF,20%,20V	90201	TDC156M020FL
C2072	283-0004-00			CAP.,FXD,CER DI:0.02UF,+80-20%,150V	72982	855-558-Z5V0203Z
C2075	283-0004-00			CAP.,FXD,CER DI:0.02UF,+80-20%,150V	72982	855-558-Z5V0203Z
C2076	290-0527-00			CAP.,FXD,ELCTLT:15UF,20%,20V	90201	TDC156M020FL
C2085	283-0004-00			CAP.,FXD,CER DI:0.02UF,+80-20%,150V	72982	855-558-Z5V0203Z
C2086	290-0527-00			CAP.,FXD,ELCTLT:15UF,20%,20V	90201	TDC156M020FL
C2087	290-0517-00			CAP.,FXD,ELCTLT:6.8UF,20%,35V	56289	196D685X0035KA1
C2091	283-0004-00			CAP.,FXD,CER DI:0.02UF,+80-20%,150V	72982	855-558-Z5V0203Z
C2092	283-0004-00			CAP.,FXD,CER DI:0.02UF,+80-20%,150V	72982	855-558-Z5V0203Z
C2101	290-0529-00	B010100	B010434	CAP.,FXD,ELCTLT:47UF,20%,20V	05397	T368C476M020AZ
C2101	290-0519-00	B010435		CAP.,FXD,ELCTLT:100UF,20%,20V	90201	TDC107M020WLD
C2106	283-0000-00			CAP.,FXD,CER DI:0.001UF,+100-0%,500V	72982	831-516E102P
C2108	285-0012-00			CAP.,FXD,GL DI:200PF,2%,500V	95275	VY13C201G
C2109	285-1006-00			CAP.,FXD,PLSTC:0.22UF,2%,50V	80009	285-1006-00
C2111	283-0000-00			CAP.,FXD,CER DI:0.001UF,+100-0%,500V	72982	831-516E102P
C2117	290-0512-00	B010100	B010434	CAP.,FXD,ELCTLT:22UF,20%,15V	56289	196D226X0015KA1
C2117	290-0519-00	B010435		CAP.,FXD,ELCTLT:100UF,20%,20V	90201	TDC107M020WLD
C2139	283-0178-00			CAP.,FXD,CER DI:0.1UF,+80-20%,100V	72982	8131N145 E 104Z
CR6	152-0141-02			SEMICOND DEVICE:SILICON,30V,150MA	07910	1N4152

http://manoman.sqhill.com

Ckt No.	Tektronix Part No.	Serial/Model No. Eff	Dscont	Name & Description	Mfr Code	Mfr Part Number
CR32	152-0323-01	XB150000		SEMICOND DEVICE:SILICON,35V,100MA	80009	152-0323-01
CR33[1]	152-0367-00	B010100	B149999	SEMICOND DEVICE:SILICON,20V,20PA	80009	152-0367-00
CR33[1]	152-0153-00	B150000	B155229	SEMICOND DEVICE:SILICON,15V,50MA	80009	152-0153-00
CR33[1,2]	152-0141-02	B155230		SEMICOND DEVICE:SILICON,30V,150MA	07910	1N4152
CR62[1]	152-0141-02			SEMICOND DEVICE:SILICON,30V,150MA	07910	1N4152
CR64[1]	152-0075-00			SEMICOND DEVICE:GE,25V,40MA	80009	152-0075-00
CR65[1]	152-0075-00			SEMICOND DEVICE:GE,25V,40MA	80009	152-0075-00
CR97	150-1004-00	B010100	B144079	LAMP,LED:RED,2.5V,15MA	08806	SSL-12
CR97	150-1040-03	B144080		LAMP,LED:RED,5MA,2.0V	80009	150-1040-03
CR98	150-1004-00	B010100	B144079	LAMP,LED:RED,2.5V,15MA	08806	SSL-12
CR98	150-1040-03	B144080		LAMP,LED:RED,5MA,2.0V	80009	150-1040-03
CR99	150-1004-00	B010100	B144079	LAMP,LED:RED,2.5V,15MA	08806	SSL-12
CR99	150-1040-03	B144080		LAMP,LED:RED,5MA,2.0V	80009	150-1040-03
CR201	152-0061-00	B010100	B049999	SEMICOND DEVICE:SILICON,175V,100MA	80009	152-0061-00
CR201	153-0051-00	B050000		SEMICOND DEVICE:SILICON,MATCHED SET	80009	153-0051-00
CR202	152-0061-00	B010100	B049999	SEMICOND DEVICE:SILICON,175V,100MA	80009	152-0061-00
CR202	153-0051-00	B050000		SEMICOND DEVICE:SILICON,MATCHED SET	80009	153-0051-00
CR203	152-0061-00	B010100	B049999	SEMICOND DEVICE:SILICON,175V,100MA	80009	152-0061-00
CR203	153-0051-00	B050000		SEMICOND DEVICE:SILICON,MATCHED SET	80009	153-0051-00
CR204	152-0061-00	B010100	B049999	SEMICOND DEVICE:SILICON,175V,100MA	80009	152-0061-00
CR204						
CR291	152-0141-02			SEMICOND DEVICE:SILICON,30V,150MA	07910	1N4152
CR301	152-0061-00	B010100	B049999	SEMICOND DEVICE:SILICON,175V,100MA	80009	152-0061-00
CR301	153-0051-00	B050000				
CR302	152-0061-00	B010100	B049999	SEMICOND DEVICE:SILICON,175V,100MA	80009	152-0061-00
CR302	153-0051-00	B050000		SEMICOND DEVICE:SILICON,MATCHED SET	80009	153-0051-00
CR303	152-0061-00	B010100	B049999	SEMICOND DEVICE:SILICON,175V,100MA	80009	152-0061-00
CR303	153-0051-00	B050000				
CR304	152-0061-00	B010100	B049999	SEMICOND DEVICE:SILICON,175V,100MA	80009	152-0061-00
CR304	153-0051-00	B050000				
CR410	152-0141-02			SEMICOND DEVICE:SILICON,30V,150MA	07910	1N4152
CR542	152-0141-02			SEMICOND DEVICE:SILICON,30V,150MA	07910	1N4152
CR562	152-0141-02			SEMICOND DEVICE:SILICON,30V,150MA	07910	1N4152
CR682	152-0141-02			SEMICOND DEVICE:SILICON,30V,150MA	07910	1N4152
CR711	152-0246-00			SEMICOND DEVICE:SILICON,400PIV,200MA	80009	152-0246-00
CR718	152-0141-02			SEMICOND DEVICE:SILICON,30V,150MA	07910	1N4152
CR732	152-0322-00	XB070000	B099999X	SEMICOND DEVICE:SILICON,15V,HOT CARRIER	28480	5082-2672
CR734	152-0322-00	XB070000	B099999X	SEMICOND DEVICE:SILICON,15V,HOT CARRIER	28480	5082-2672
CR751	152-0177-00	B010100	B049999	SEMICOND DEVICE:TUNNEL,10MA,4PF	80009	152-0177-00
CR751	152-0177-02	B050000		SEMICOND DEVICE:TUNNEL,10MA,+/-0.5MA,2PF	80009	152-0177-02
CR762	152-0177-00			SEMICOND DEVICE:TUNNEL,10MA,4PF	80009	152-0177-00
CR772	152-0177-00			SEMICOND DEVICE:TUNNEL,10MA,4PF	80009	152-0177-00
CR781	152-0075-00			SEMICOND DEVICE:GE,25V,40MA	80009	152-0075-00
CR784	152-0141-02			SEMICOND DEVICE:SILICON,30V,150MA	07910	1N4152
CR785	152-0141-02			SEMICOND DEVICE:SILICON,30V,150MA	07910	1N4152
CR816	152-0141-02			SEMICOND DEVICE:SILICON,30V,150MA	07910	1N4152
CR838[3]	152-0141-02			SEMICOND DEVICE:SILICON,30V,150MA	07910	1N4152
CR839[3]	152-0141-02			SEMICOND DEVICE:SILICON,30V,150MA	07910	1N4152
CR853	152-0141-02			SEMICOND DEVICE:SILICON,30V,150MA	07910	1N4152
CR856	152-0141-02			SEMICOND DEVICE:SILICON,30V,150MA	07910	1N4152
CR864	152-0151-00			SEMICOND DEVICE:SILICON,30V,150MA	80009	152-0151-00
CR867	152-0153-00			SEMICOND DEVICE:SILICON,15V,50MA	80009	152-0153-00
CR868	152-0141-02			SEMICOND DEVICE:SILICON,30V,150MA	07910	1N4152

[1] 485, 485-1 only
[2] Added as required
[3] 485 only

http://manoman.sqhill.com

Ckt No.	Tektronix Part No.	Serial/Model No. Eff	Dscont	Name & Description	Mfr Code	Mfr Part Number
CR879	152-0141-02			SEMICOND DEVICE:SILICON,30V,150MA	07910	1N4152
CR886	152-0141-02			SEMICOND DEVICE:SILICON,30V,150MA	07910	1N4152
CR902	152-0307-00			SEMICOND DEVICE:SILICON,300V,0.13A	04713	SSD1150
CR935	152-0141-02			SEMICOND DEVICE:SILICON,30V,150MA	07910	1N4152
CR1011	152-0246-00			SEMICOND DEVICE:SILICON,400PIV,200MA	80009	152-0246-00
CR1052	152-0177-00	B010100	B049999	SEMICOND DEVICE:TUNNEL,10MA,4PF	80009	152-0177-00
CR1052	152-0177-02	B050000		SEMICOND DEVICE:TUNNEL,10MA,+/-0.5MA,2PF	80009	152-0177-02
CR1062	152-0177-00			SEMICOND DEVICE:TUNNEL,10MA,4PF	80009	152-0177-00
CR1070	152-0141-02			SEMICOND DEVICE:SILICON,30V,150MA	07910	1N4152
CR1071	152-0141-02			SEMICOND DEVICE:SILICON,30V,150MA	07910	1N4152
CR1098	152-0141-02			SEMICOND DEVICE:SILICON,30V,150MA	07910	1N4152
CR1104	152-0177-00			SEMICOND DEVICE:TUNNEL,10MA,4PF	80009	152-0177-00
CR1108	152-0141-02			SEMICOND DEVICE:SILICON,30V,150MA	07910	1N4152
CR1121	152-0141-02			SEMICOND DEVICE:SILICON,30V,150MA	07910	1N4152
CR1152	152-0153-00			SEMICOND DEVICE:SILICON,15V,50MA	80009	152-0153-00
CR1153	152-0153-00			SEMICOND DEVICE:SILICON,15V,50MA	80009	152-0153-00
CR1156	152-0333-00			SEMICOND DEVICE:SILICON,55V,200MA	80009	152-0333-00
CR1166	152-0333-00			SEMICOND DEVICE:SILICON,55V,200MA	80009	152-0333-00
CR1168	152-0141-02			SEMICOND DEVICE:SILICON,30V,150MA	07910	1N4152
CR1204	152-0141-02			SEMICOND DEVICE:SILICON,30V,150MA	07910	1N4152
CR1206	152-0141-02			SEMICOND DEVICE:SILICON,30V,150MA	07910	1N4152
CR1211	152-0153-00			SEMICOND DEVICE:SILICON,15V,50MA	80009	152-0153-00
CR1214	152-0141-02			SEMICOND DEVICE:SILICON,30V,150MA	07910	1N4152
CR1215	152-0141-02			SEMICOND DEVICE:SILICON,30V,150MA	07910	1N4152
CR1217	152-0153-00			SEMICOND DEVICE:SILICON,15V,50MA	80009	152-0153-00
CR1221	152-0141-02			SEMICOND DEVICE:SILICON,30V,150MA	07910	1N4152
CR1234	152-0141-02			SEMICOND DEVICE:SILICON,30V,150MA	07910	1N4152
CR1237	152-0141-02			SEMICOND DEVICE:SILICON,30V,150MA	07910	1N4152
CR1238	152-0141-02			SEMICOND DEVICE:SILICON,30V,150MA	07910	1N4152
CR1239	152-0245-00			SEMICOND DEVICE:SILICON,10NA AT 5V	80009	152-0245-00
CR1242	152-0141-02			SEMICOND DEVICE:SILICON,30V,150MA	07910	1N4152
CR1272	152-0141-02			SEMICOND DEVICE:SILICON,30V,150MA	07910	1N4152
CR1273	152-0141-02			SEMICOND DEVICE:SILICON,30V,150MA	07910	1N4152
CR1311	152-0141-02			SEMICOND DEVICE:SILICON,30V,150MA	07910	1N4152
CR1321	152-0141-02			SEMICOND DEVICE:SILICON,30V,150MA	07910	1N4152
CR1336	152-0141-02			SEMICOND DEVICE:SILICON,30V,150MA	07910	1N4152
CR1356	152-0141-02			SEMICOND DEVICE:SILICON,30V,150MA	07910	1N4152
CR1358	152-0141-02			SEMICOND DEVICE:SILICON,30V,150MA	07910	1N4152
CR1359	152-0141-02			SEMICOND DEVICE:SILICON,30V,150MA	07910	1N4152
CR1366	152-0141-02			SEMICOND DEVICE:SILICON,30V,150MA	07910	1N4152
CR1400	152-0141-02			SEMICOND DEVICE:SILICON,30V,150MA	07910	1N4152
CR1431	152-0141-02			SEMICOND DEVICE:SILICON,30V,150MA	07910	1N4152
CR1482	152-0141-02			SEMICOND DEVICE:SILICON,30V,150MA	07910	1N4152
CR1491	152-0141-02			SEMICOND DEVICE:SILICON,30V,150MA	07910	1N4152
CR1492	152-0141-02			SEMICOND DEVICE:SILICON,30V,150MA	07910	1N4152
CR1494	152-0141-02			SEMICOND DEVICE:SILICON,30V,150MA	07910	1N4152
CR1495	152-0141-02			SEMICOND DEVICE:SILICON,30V,150MA	07910	1N4152
CR1504	152-0141-02			SEMICOND DEVICE:SILICON,30V,150MA	07910	1N4152
CR1526	152-0141-02			SEMICOND DEVICE:SILICON,30V,150MA	07910	1N4152
CR1530	152-0141-02			SEMICOND DEVICE:SILICON,30V,150MA	07910	1N4152
CR1531	152-0141-02			SEMICOND DEVICE:SILICON,30V,150MA	07910	1N4152
CR1532	152-0141-02			SEMICOND DEVICE:SILICON,30V,150MA	07910	1N4152
CR1533	152-0141-02			SEMICOND DEVICE:SILICON,30V,150MA	07910	1N4152

http://manoman.sqhill.com

Ckt No.	Tektronix Part No.	Serial/Model No. Eff	Dscont	Name & Description	Mfr Code	Mfr Part Number
CR1534	152-0141-02			SEMICOND DEVICE:SILICON,30V,150MA	07910	1N4152
CR1535	152-0141-02			SEMICOND DEVICE:SILICON,30V,150MA	07910	1N4152
CR1536	152-0141-02			SEMICOND DEVICE:SILICON,30V,150MA	07910	1N4152
CR1538	152-0141-02			SEMICOND DEVICE:SILICON,30V,150MA	07910	1N4152
CR1539	152-0141-02			SEMICOND DEVICE:SILICON,30V,150MA	07910	1N4152
CR1551	152-0141-02			SEMICOND DEVICE:SILICON,30V,150MA	07910	1N4152
CR1552	152-0141-02			SEMICOND DEVICE:SILICON,30V,150MA	07910	1N4152
CR1557	152-0141-02			SEMICOND DEVICE:SILICON,30V,150MA	07910	1N4152
CR1558	152-0141-02			SEMICOND DEVICE:SILICON,30V,150MA	07910	1N4152
CR1561	152-0141-02			SEMICOND DEVICE:SILICON,30V,150MA	07910	1N4152
CR1581	152-0141-02			SEMICOND DEVICE:SILICON,30V,150MA	07910	1N4152
CR1582	152-0141-02			SEMICOND DEVICE:SILICON,30V,150MA	07910	1N4152
CR1584	152-0075-00			SEMICOND DEVICE:GE,25V,40MA	80009	152-0075-00
CR1585	152-0141-02			SEMICOND DEVICE:SILICON,30V,150MA	07910	1N4152
CR1601	152-0409-00			SEMICOND DEVICE:SILICON,12,000V,5MA	80009	152-0409-00
CR1602	152-0409-00			SEMICOND DEVICE:SILICON,12,000V,5MA	80009	152-0409-00
CR1618	152-0066-00			SEMICOND DEVICE:SILICON,400V,750MA	80009	152-0066-00
CR1621	152-0141-02			SEMICOND DEVICE:SILICON,30V,150MA	07910	1N4152
CR1626	152-0242-00			SEMICOND DEVICE:SILICON,225V,200MA	12969	NDP341
CR1627	152-0242-00			SEMICOND DEVICE:SILICON,225V,200MA	12969	NDP341
CR1646	152-0242-00			SEMICOND DEVICE:SILICON,225V,200MA	12969	NDP341
CR1651	152-0242-00			SEMICOND DEVICE:SILICON,225V,200MA	12969	NDP341
CR1652	152-0242-00			SEMICOND DEVICE:SILICON,225V,200MA	12969	NDP341
CR1656	152-0242-00			SEMICOND DEVICE:SILICON,225V,200MA	12969	NDP341
CR1660	152-0242-00			SEMICOND DEVICE:SILICON,225V,200MA	12969	NDP341
CR1663	152-0242-00			SEMICOND DEVICE:SILICON,225V,200MA	12969	NDP341
CR1664	152-0242-00			SEMICOND DEVICE:SILICON,225V,200MA	12969	NDP341
CR1666	152-0242-00			SEMICOND DEVICE:SILICON,225V,200MA	12969	NDP341
CR1710	152-0141-02			SEMICOND DEVICE:SILICON,30V,150MA	07910	1N4152
CR1735	152-0107-00			SEMICOND DEVICE:SILICON,400V,400MA	80009	152-0107-00
CR1737	152-0141-02			SEMICOND DEVICE:SILICON,30V,150MA	07910	1N4152
CR1738	152-0141-02			SEMICOND DEVICE:SILICON,30V,150MA	07910	1N4152
CR1739	152-0141-02			SEMICOND DEVICE:SILICON,30V,150MA	07910	1N4152
CR1752	152-0141-02			SEMICOND DEVICE:SILICON,30V,150MA	07910	1N4152
CR1766	152-0233-00			SEMICOND DEVICE:SILICON,85V,100MA	80009	152-0233-00
CR1769	152-0061-00			SEMICOND DEVICE:SILICON,175V,100MA	80009	152-0061-00
CR1775	152-0141-02			SEMICOND DEVICE:SILICON,30V,150MA	07910	1N4152
CR1776	152-0141-02			SEMICOND DEVICE:SILICON,30V,150MA	07910	1N4152
CR1777	152-0141-02			SEMICOND DEVICE:SILICON,30V,150MA	07910	1N4152
CR1821	152-0396-01			SEMICOND DEVICE:SILICON,400V,3A	12969	652-821
CR1832	152-0061-00			SEMICOND DEVICE:SILICON,175V,100MA	80009	152-0061-00
CR1833	152-0061-00			SEMICOND DEVICE:SILICON,175V,100MA	80009	152-0061-00
CR1834	152-0400-00			SEMICOND DEVICE:SILICON,400V,1A	80009	152-0400-00
CR1842	152-0107-00			SEMICOND DEVICE:SILICON,400V,400MA	80009	152-0107-00
CR1843	152-0107-00			SEMICOND DEVICE:SILICON,400V,400MA	80009	152-0107-00
CR1844	152-0400-00			SEMICOND DEVICE:SILICON,400V,1A	80009	152-0400-00
CR1848	152-0107-00			SEMICOND DEVICE:SILICON,400V,400MA	80009	152-0107-00
CR1901	152-0141-02			SEMICOND DEVICE:SILICON,30V,150MA	07910	1N4152
CR1904	152-0141-02			SEMICOND DEVICE:SILICON,30V,150MA	07910	1N4152
CR1912	152-0141-02	B010100	B129999X	SEMICOND DEVICE:SILICON,30V,150MA	07910	1N4152
CR1923	152-0333-00			SEMICOND DEVICE:SILICON,55V,200MA	80009	152-0333-00
CR1924	152-0333-00			SEMICOND DEVICE:SILICON,55V,200MA	80009	152-0333-00
CR1925	152-0333-00			SEMICOND DEVICE:SILICON,55V,200MA	80009	152-0333-00

http://manoman.sqhill.com

Ckt No.	Tektronix Part No.	Serial/Model No. Eff	Dscont	Name & Description	Mfr Code	Mfr Part Number
CR1931	152-0333-00			SEMICOND DEVICE:SILICON,55V,200MA	80009	152-0333-00
CR1932	152-0333-00			SEMICOND DEVICE:SILICON,55V,200MA	80009	152-0333-00
CR1933	152-0333-00			SEMICOND DEVICE:SILICON,55V,200MA	80009	152-0333-00
CR1934	152-0333-00			SEMICOND DEVICE:SILICON,55V,200MA	80009	152-0333-00
CR1943	152-0141-02			SEMICOND DEVICE:SILICON,30V,150MA	07910	1N4152
CR1958	152-0141-02			SEMICOND DEVICE:SILICON,30V,150MA	07910	1N4152
CR1959	152-0141-02			SEMICOND DEVICE:SILICON,30V,150MA	07910	1N4152
CR2001	152-0413-00			SEMICOND DEVICE:SILICON,400V,750MA	80009	152-0413-00
CR2002	152-0413-00			SEMICOND DEVICE:SILICON,400V,750MA	80009	152-0413-00
CR2004	152-0413-00			SEMICOND DEVICE:SILICON,400V,750MA	80009	152-0413-00
CR2005	152-0413-00			SEMICOND DEVICE:SILICON,400V,750MA	80009	152-0413-00
CR2006	152-0413-00			SEMICOND DEVICE:SILICON,400V,750MA	80009	152-0413-00
CR2007	152-0413-00			SEMICOND DEVICE:SILICON,400V,750MA	80009	152-0413-00
CR2011	152-0414-00			SEMICOND DEVICE:SILICON,200V,0.75A	80009	152-0414-00
CR2012	152-0414-00			SEMICOND DEVICE:SILICON,200V,0.75A	80009	152-0414-00
CR2014	152-0412-00			SEMICOND DEVICE:SILICON,50V,3A	80009	152-0412-00
CR2015	152-0412-00			SEMICOND DEVICE:SILICON,50V,3A	80009	152-0412-00
CR2016	152-0412-00			SEMICOND DEVICE:SILICON,50V,3A	80009	152-0412-00
CR2017	152-0412-00			SEMICOND DEVICE:SILICON,50V,3A	80009	152-0412-00
CR2034	152-0412-00			SEMICOND DEVICE:SILICON,50V,3A	80009	152-0412-00
CR2035	152-0412-00			SEMICOND DEVICE:SILICON,50V,3A	80009	152-0412-00
CR2036	152-0412-00			SEMICOND DEVICE:SILICON,50V,3A	80009	152-0412-00
CR2037	152-0412-00			SEMICOND DEVICE:SILICON,50V,3A	80009	152-0412-00
CR2042	152-0061-00			SEMICOND DEVICE:SILICON,175V,100MA	80009	152-0061-00
CR2047	152-0141-02	B010100	B139999X	SEMICOND DEVICE:SILICON,30V,150MA	07910	1N4152
CR2052	152-0141-02			SEMICOND DEVICE:SILICON,30V,150MA	07910	1N4152
CR2124	152-0322-00			SEMICOND DEVICE:SILICON,15V,HOT CARRIER	28480	5082-2672
CR2133	152-0322-00			SEMICOND DEVICE:SILICON,15V,HOT CARRIER	28480	5082-2672
DL1	119-0325-00			DELAY LINE,ELEC:	80009	119-0325-00
DL410	119-0302-00			DELAY LINE,ELEC:	80009	119-0302-00
DS96	150-0048-01			LAMP,INCAND:5V,0.06A,SEL	08806	683AS15
DS125[1]	150-0048-01			LAMP,INCAND:5V,0.06A,SEL	08806	683AS15
DS290	150-0128-00			LAMP,INCAND:6V,200MA	71744	1784
DS291	150-0128-00			LAMP,INCAND:6V,200MA	71744	1784
DS630	150-0048-01			LAMP,INCAND:5V,0.06A,SEL	08806	683AS15
DS780	150-0048-01			LAMP,INCAND:5V,0.06A,SEL	08806	683AS15
DS781	150-0048-01			LAMP,INCAND:5V,0.06A,SEL	08806	683AS15
DS1668	150-0030-00			LAMP,GLOW:NEON,T-2,60 TO 90 VOLTS	08806	A2B-T
DS1669	150-0030-00			LAMP,GLOW:NEON,T-2,60 TO 90 VOLTS	08806	A2B-T
DS1684	150-0030-00			LAMP,GLOW:NEON,T-2,60 TO 90 VOLTS	08806	A2B-T
DS1685	150-0030-00			LAMP,GLOW:NEON,T-2,60 TO 90 VOLTS	08806	A2B-T
DS1687	150-0030-00			LAMP,GLOW:NEON,T-2,60 TO 90 VOLTS	08806	A2B-T
DS1801	119-0181-00			SURGE VOLTAGE P:230VAC,+/-15%	80009	119-0181-00
DS1802	119-0181-00			SURGE VOLTAGE P:230VAC,+/-15%	80009	119-0181-00
DS1824	150-0035-00			LAMP,GLOW:90V,0.3MA	53944	A1B-3
F1801	159-0015-00			FUSE,CARTRIDGE:3AG,3A,250V,FAST-BLOW	71400	AGC 3
J1	131-0679-00	B010100	B131949	CONNECTOR,RCPT,:BNC W/HARDWARE	24931	28JR168-1
J1	131-0679-01	B131950		CONNECTOR,RCPT,:BNC W/HARDWARE	24931	28JR168-1
J5	131-1003-00			CONNECTOR BODY,:CKT CD MT,3 PRONG	80009	131-1003-00
J70[1]	131-1003-00			CONNECTOR BODY,:CKT CD MT,3 PRONG	80009	131-1003-00
J101	131-1003-00			CONNECTOR BODY,:CKT CD MT,3 PRONG	80009	131-1003-00

[1] 485, 485-1 only.

http://manoman.sqhill.com

Ckt No.	Tektronix Part No.	Serial/Model No. Eff	Dscont	Name & Description	Mfr Code	Mfr Part Number
J129[1]	131-1003-00			CONNECTOR BODY,:CKT CD MT,3 PRONG	80009	131-1003-00
J149	131-1003-00			CONNECTOR BODY,:CKT CD MT,3 PRONG	80009	131-1003-00
J200	131-1003-00			CONNECTOR BODY,:CKT CD MT,3 PRONG	80009	131-1003-00
J300	131-1003-00			CONNECTOR BODY,:CKT CD MT,3 PRONG	80009	131-1003-00
J410	131-1003-00			CONNECTOR BODY,:CKT CD MT,3 PRONG	80009	131-1003-00
J415	131-1003-00			CONNECTOR BODY,:CKT CD MT,3 PRONG	80009	131-1003-00
J430	131-1003-00			CONNECTOR BODY,:CKT CD MT,3 PRONG	80009	131-1003-00
J435	131-1003-00			CONNECTOR BODY,:CKT CD MT,3 PRONG	80009	131-1003-00
J566	131-1003-00			CONNECTOR BODY,:CKT CD MT,3 PRONG	80009	131-1003-00
J568	131-1003-00			CONNECTOR BODY,:CKT CD MT,3 PRONG	80009	131-1003-00
J572	131-1003-00			CONNECTOR BODY,:CKT CD MT,3 PRONG	80009	131-1003-00
J620	131-1003-00			CONNECTOR BODY,:CKT CD MT,3 PRONG	80009	131-1003-00
J625	131-1003-00			CONNECTOR BODY,:CKT CD MT,3 PRONG	80009	131-1003-00
J701	131-0955-00			CONNECTOR,RCPT,:BNC,FEMALE,W/HARDWARE	05091	31-279
J762	131-1003-00			CONNECTOR BODY,:CKT CD MT,3 PRONG	80009	131-1003-00
J763	131-1003-00			CONNECTOR BODY,:CKT CD MT,3 PRONG	80009	131-1003-00
J781	131-0955-00			CONNECTOR,RCPT,:BNC,FEMALE,W/HARDWARE	05091	31-279
J813	131-1003-00			CONNECTOR BODY,:CKT CD MT,3 PRONG	80009	131-1003-00
J814	131-1003-00			CONNECTOR BODY,:CKT CD MT,3 PRONG	80009	131-1003-00
J816	131-1003-00			CONNECTOR BODY,:CKT CD MT,3 PRONG	80009	131-1003-00
J842[2]	131-1003-00			CONNECTOR BODY,:CKT CD MT,3 PRONG	80009	131-1003-00
J843[2]	131-1003-00			CONNECTOR BODY,:CKT CD MT,3 PRONG	80009	131-1003-00
J948	131-1003-00			CONNECTOR BODY,:CKT CD MT,3 PRONG	80009	131-1003-00
J949	131-0955-00			CONNECTOR,RCPT,:BNC,FEMALE,W/HARDWARE	05091	31-279
J1001	131-0955-00			CONNECTOR,RCPT,:BNC,FEMALE,W/HARDWARE	05091	31-279
J1063	131-1003-00			CONNECTOR BODY,:CKT CD MT,3 PRONG	80009	131-1003-00
J1064	131-1003-00			CONNECTOR BODY,:CKT CD MT,3 PRONG	80009	131-1003-00
J1116	131-1003-00			CONNECTOR BODY,:CKT CD MT,3 PRONG	80009	131-1003-00
J1117	131-1003-00			CONNECTOR BODY,:CKT CD MT,3 PRONG	80009	131-1003-00
J1119	131-0955-00			CONNECTOR,RCPT,:BNC,FEMALE,W/HARDWARE	05091	31-279
J1346	131-1003-00			CONNECTOR BODY,:CKT CD MT,3 PRONG	80009	131-1003-00
J1549	131-1003-00			CONNECTOR BODY,:CKT CD MT,3 PRONG	80009	131-1003-00
J1551	131-1003-00			CONNECTOR BODY,:CKT CD MT,3 PRONG	80009	131-1003-00
J1554	131-1003-00			CONNECTOR BODY,:CKT CD MT,3 PRONG	80009	131-1003-00
J1555	131-0861-00			CONTACT,ELEC:QUICK DISCONNECT	00779	42617-2
J1557	131-1003-00			CONNECTOR BODY,:CKT CD MT,3 PRONG	80009	131-1003-00
J1785	131-0771-00			CONNECTOR,RCPT,:4 CONT,QUICK DISCONNECT	0000A	ROA-304NYL
J1787	131-0771-00			CONNECTOR,RCPT,:4 CONT,QUICK DISCONNECT	0000A	ROA-304NYL
J2134	131-1003-00			CONNECTOR BODY,:CKT CD MT,3 PRONG	80009	131-1003-00
J2135	131-0818-00			CONNECTOR,RCPT,:BNC,FEMALE	91836	KC19-153BNC
K1	148-0070-00			RELAY,ARMATURE:SPDT,21VDC,450MW,3.5A,30VDC	05587	A1558
K410[2]	148-0071-00			RELAY,ARMATURE:PLUG-IN,DPDT	99699	2X-A1538
K879	148-0034-01			RELAY,ARMATURE:OHM	80009	148-0034-01
K1242[3]	148-0034-01			RELAY,ARMATURE:OHM	80009	148-0034-01
L5						
L51	276-0507-00	XB030000		SHIELDING BEAD,:0.6UH	78488	57-0180-7D 500B
L94	108-0598-00			COIL,RF:200UH	80009	108-0598-00
L101[3]						
L127[4]						
L149	276-0581-00			CORE,ADJ TUNING:	78488	57-1307
L201	108-0245-00			COIL,RF:3.9UH	80009	108-0245-00
L204	108-0245-00			COIL,RF:3.9UH	80009	108-0245-00
L211	108-0245-00			COIL,RF:3.9UH	80009	108-0245-00

[1] 485, 485-1 only
[2] 485 only
[3] Wire lead
[4] Part of Circuit Board.

http://manoman.sqhill.com

Ckt No.	Tektronix Part No.	Serial/Model No. Eff	Dscont	Name & Description	Mfr Code	Mfr Part Number
L240	108-0557-00			COIL,RF:35NH	80009	108-0557-00
L241	108-0557-00			COIL,RF:35NH	80009	108-0557-00
L242	108-0245-00			COIL,RF:3.9UH	80009	108-0245-00
L245[1]						
L248[1]						
L262	108-0245-00			COIL,RF:3.9UH	80009	108-0245-00
L266	108-0245-00			COIL,RF:3.9UH	80009	108-0245-00
L290	276-0543-00	XB130000		SHIELDING BEAD,:	80009	276-0543-00
L310	108-0245-00			COIL,RF:3.9UH	80009	108-0245-00
L312	108-0245-00			COIL,RF:3.9UH	80009	108-0245-00
L340	108-0557-00			COIL,RF:35NH	80009	108-0557-00
L341	108-0557-00			COIL,RF:35NH	80009	108-0557-00
L342	108-0245-00			COIL,RF:3.9UH	80009	108-0245-00
L345[1]						
L348[1]						
L362	108-0245-00			COIL,RF:3.9UH	80009	108-0245-00
L366	108-0245-00			COIL,RF:3.9UH	80009	108-0245-00
L401[1]						
L405[1]						
L409	108-0733-00			COIL,RF:113NH	80009	108-0733-00
L419	108-0538-00			COIL,RF:2.7UH	76493	70F276A1
L421[1]						
L425[1]						
L501[1]						
L502[1]						
L505[1]						
L506[1]						
L511	108-0245-00			COIL,RF:3.9UH	80009	108-0245-00
L521[1]						
L522[1]						
L525[1]						
L526[1]						
L531	108-0245-00			COIL,RF:3.9UH	80009	108-0245-00
L548	108-0245-00			COIL,RF:3.9UH	80009	108-0245-00
L559	108-0736-00			COIL,RF:825NH	80009	108-0736-00
L581	108-0245-00			COIL,RF:3.9UH	80009	108-0245-00
L583	108-0245-00			COIL,RF:3.9UH	80009	108-0245-00
L584	108-0538-00			COIL,RF:2.7UH	76493	70F276A1
L585	108-0245-00			COIL,RF:3.9UH	80009	108-0245-00
L621[1]						
L625[1]						
L650	108-0182-00			COIL,RF:0.3UH	80009	108-0182-00
L651(2)	276-0543-00			SHIELDING BEAD,:	80009	276-0543-00
L652	108-0734-00			COIL,RF:175NH	80009	108-0734-00
L653(2)	276-0543-00			SHIELDING BEAD,:	80009	276-0543-00
L654	114-0289-00			COIL,RF:0.15-0.35UH,CORE 276-0568-00	80009	114-0289-00
L655	108-0735-00			COIL,RF:575NH	80009	108-0735-00
L656	108-0735-00			COIL,RF:575NH	80009	108-0735-00
L695	108-0215-00			COIL,RF:1.1UH	80009	108-0215-00
L697	108-0538-00			COIL,RF:2.7UH	76493	70F276A1
L698	108-0538-00			COIL,RF:2.7UH	76493	70F276A1
L731[1]						
L732[1]						

[1]Part of Circuit Board.

http://manoman.sqhill.com

Ckt No.	Tektronix Part No.	Serial/Model No. Eff	Dscont	Name & Description	Mfr Code	Mfr Part Number
L735[1]						
L736[1]						
L746[1]						
L747[1]						
L748[1]						
L749[1]						
L753	108-0578-00			COIL,RF:45NH	80009	108-0578-00
L757	108-0249-00			COIL,RF:12UH	76493	70F125A1
L844	108-0245-00			COIL,RF:3.9UH	80009	108-0245-00
L845	108-0249-00			COIL,RF:12UH	76493	70F125A1
L846	108-0245-00			COIL,RF:3.9UH	80009	108-0245-00
L847	108-0245-00			COIL,RF:3.9UH	80009	108-0245-00
L848	108-0245-00			COIL,RF:3.9UH	80009	108-0245-00
L851	276-0507-00			SHIELDING BEAD,:0.6UH	78488	57-0180-7D 500B
L853	276-0507-00			SHIELDING BEAD,:0.6UH	78488	57-0180-7D 500B
L883	276-0528-00			SHIELDING BEAD,:0.1UH	80009	276-0528-00
L884	276-0528-00			SHIELDING BEAD,:0.1UH	80009	276-0528-00
L891	108-0146-00			COIL,RF:5UH	80009	108-0146-00
L893	120-0285-00			XFMR,TOROID:4 TURNS SINGLE	80009	120-0285-00
L942	276-0528-00			SHIELDING BEAD,:0.1UH	80009	276-0528-00
L943	276-0528-00			SHIELDING BEAD,:0.1UH	80009	276-0528-00
L1031[1]						
L1032[1]						
L1033[1]						
L1034[1]						
L1038	276-0528-00			SHIELDING BEAD,:0.1UH	80009	276-0528-00
L1041[1]						
L1042[1]						
L1043[1]						
L1044[1]						
L1055	108-0578-00			COIL,RF:45NH	80009	108-0578-00
L1057	108-0249-00			COIL,RF:12UH	76493	70F125A1
L1099	108-0245-00			COIL,RF:3.9UH	80009	108-0245-00
L1130	108-0245-00			COIL,RF:3.9UH	80009	108-0245-00
L1131	108-0245-00			COIL,RF:3.9UH	80009	108-0245-00
L1133	108-0245-00			COIL,RF:3.9UH	80009	108-0245-00
L1134	108-0249-00			COIL,RF:12UH	76493	70F125A1
L1137	108-0245-00			COIL,RF:3.9UH	80009	108-0245-00
L1156	276-0507-00			SHIELDING BEAD,:0.6UH	78488	57-0180-7D 500B
L1157	276-0507-00			SHIELDING BEAD,:0.6UH	78488	57-0180-7D 500B
L1192	276-0507-00			SHIELDING BEAD,:0.6UH	78488	57-0180-7D 500B
L1202	276-0507-00			SHIELDING BEAD,:0.6UH	78488	57-0180-7D 500B
L1231	276-0528-00			SHIELDING BEAD,:0.1UH	80009	276-0528-00
L1232	276-0528-00			SHIELDING BEAD,:0.1UH	80009	276-0528-00
L1251	108-0146-00			COIL,RF:5UH	80009	108-0146-00
L1252	120-0285-00			XFMR,TOROID:4 TURNS SINGLE	80009	120-0285-00
L1346	114-0222-00			COIL,RF:2-6UH,CORE 276-0568-00	80009	114-0222-00
L1578	108-0538-00			COIL,RF:2.7UH	76493	70F276A1
L1748	108-0538-00			COIL,RF:2.7UH	76493	70F276A1
L1790	108-0711-00			COIL,RF:TRACE ROTATION	80009	108-0711-00
L1794	108-0710-00			COIL,RF:Y AXIS ALIGNMENT	80009	108-0710-00
L1812	108-0728-00			COIL,RF:116UF	80009	108-0728-00
L1813	108-0728-00			COIL,RF:116UF	80009	108-0728-00

[1]Part of Circuit Board.

http://manoman.sqhill.com

Ckt No.	Tektronix Part No.	Serial/Model No. Eff	Dscont	Name & Description	Mfr Code	Mfr Part Number
L1825	108-0742-00			COIL,RF:83UH,TOROIDAL	80009	108-0742-00
L1835	108-0709-00			COIL,RF:1.6MH	80009	108-0709-00
L2008	108-0646-00			COIL,RF:80UH	80009	108-0646-00
L2009	108-0646-00			COIL,RF:80UH	80009	108-0646-00
L2018	108-0680-00			COIL,RF:27UH	80009	108-0680-00
L2019	108-0680-00			COIL,RF:27UH	80009	108-0680-00
L2038	108-0680-00			COIL,RF:27UH	80009	108-0680-00
L2039	108-0680-00			COIL,RF:27UH	80009	108-0680-00
L2101	120-0285-00			XFMR,TOROID:4 TURNS SINGLE	80009	120-0285-00
L2117	108-0538-00			COIL,RF:2.7UH	76493	70F276A1
LR202	108-0367-00			COIL,RF:1UH	80009	108-0367-00
LR203	108-0367-00			COIL,RF:1UH	80009	108-0367-00
LR239	108-0729-00			COIL,RF:195NH	80009	108-0729-00
LR261	108-0729-00			COIL,RF:195NH	80009	108-0729-00
LR264	108-0729-00			COIL,RF:195NH	80009	108-0729-00
LR302	108-0367-00			COIL,RF:1UH	80009	108-0367-00
LR303	108-0367-00			COIL,RF:1UH	80009	108-0367-00
LR339	108-0729-00			COIL,RF:195NH	80009	108-0729-00
LR361	108-0729-00			COIL,RF:195NH	80009	108-0729-00
LR364	108-0729-00			COIL,RF:195NH	80009	108-0729-00
LR652	108-0407-00			COIL,RF:20NH	80009	108-0407-00
LR654	108-0407-00			COIL,RF:20NH	80009	108-0407-00
LR655	108-0407-00			COIL,RF:20NH	80009	108-0407-00
LR656	108-0407-00			COIL,RF:20NH	80009	108-0407-00
LR690	108-0685-00			COIL,RF:80NH	80009	108-0685-00
LR692	108-0325-00			COIL,RF:0.5UH	80009	108-0325-00
LR694	108-0685-00			COIL,RF:80NH	80009	108-0685-00
LR902	108-0298-00			COIL,RF:0.25UH	80009	108-0298-00
M2089	149-0030-00	B010100	B069999X	METER,T TOTAL:CIRCUIT CARD MOUNT,DC	18583	120-LC
Q34A,B[1]	151-1032-00			TRANSISTOR:SILICON,FET,DUAL	80009	151-1032-00
Q40[1]	151-0367-00			TRANSISTOR:SILICON,NPN,SEL FROM 3571TP	80009	151-0367-00
Q50[1]	151-0367-00			TRANSISTOR:SILICON,NPN,SEL FROM 3571TP	80009	151-0367-00
Q52[1]	151-0271-00			TRANSISTOR:SILICON,PNP	80009	151-0271-00
Q56[1]	151-0212-00			TRANSISTOR:SILICON,NPN	80009	151-0212-00
Q60[1]	153-0604-00	B010100	B143554	TRANSISTOR:SILICON,NPN	80009	153-0604-00
Q60[1,2]	153-0645-00	B143555	B149999	TRANSISTOR:MATCHED SET	80009	153-0645-00
Q60[1]	151-0271-00	B150000		TRANSISTOR:SILICON,PNP	80009	151-0271-00
Q62[1]	153-0604-00	B010100	B143554	TRANSISTOR:SILICON,NPN	80009	153-0604-00
Q62[1,2]	153-0645-00	B143555	B149999	TRANSISTOR:MATCHED SET	80009	153-0645-00
Q62[1]	151-0271-00	B150000		TRANSISTOR:SILICON,PNP	80009	151-0271-00
Q70[1]	153-0604-00	B010100	B143554	TRANSISTOR:SILICON,NPN	80009	153-0604-00
Q70[1,2]	153-0645-00	B143555	B149999	TRANSISTOR:MATCHED SET	80009	153-0645-00
Q70[1]	151-0271-00	B150000		TRANSISTOR:SILICON,PNP	80009	151-0271-00
Q274	151-0224-00			TRANSISTOR:SILICON,NPN	80009	151-0224-00
Q284	151-0224-00			TRANSISTOR:SILICON,NPN	80009	151-0224-00
Q290	151-0260-00			TRANSISTOR:SILICON,NPN	80009	151-0260-00
Q374	151-0224-00			TRANSISTOR:SILICON,NPN	80009	151-0224-00
Q384	151-0224-00			TRANSISTOR:SILICON,NPN	80009	151-0224-00
Q416	151-0224-00			TRANSISTOR:SILICON,NPN	80009	151-0224-00
Q436	151-0224-00			TRANSISTOR:SILICON,NPN	80009	151-0224-00
Q440	151-0333-00			TRANSISTOR:SILICON,NPN,SEL FROM MPS918	80009	151-0333-00
Q444	151-0220-00			TRANSISTOR:SILICON,PNP	80009	151-0220-00

[1] 485, 485-1 only
[2] Q60, Q62, Q70 furnished as a matched set.

http://manoman.sqhill.com

Ckt No.	Tektronix Part No.	Serial/Model No. Eff	Dscont	Name & Description	Mfr Code	Mfr Part Number
Q454	151-0220-00			TRANSISTOR:SILICON,PNP	80009	151-0220-00
Q456	151-0333-00			TRANSISTOR:SILICON,NPN,SEL FROM MPS918	80009	151-0333-00
Q460	151-0220-00			TRANSISTOR:SILICON,PNP	80009	151-0220-00
Q462	151-0220-00			TRANSISTOR:SILICON,PNP	80009	151-0220-00
Q518	151-0224-00			TRANSISTOR:SILICON,NPN	80009	151-0224-00
Q538	151-0224-00			TRANSISTOR:SILICON,NPN	80009	151-0224-00
Q544	151-0271-00			TRANSISTOR:SILICON,PNP	80009	151-0271-00
Q546	151-0221-00			TRANSISTOR:SILICON,PNP	80009	151-0221-00
Q552	151-0221-00			TRANSISTOR:SILICON,PNP	80009	151-0221-00
Q556	151-0221-00			TRANSISTOR:SILICON,PNP	80009	151-0221-00
Q564	151-0271-00			TRANSISTOR:SILICON,PNP	80009	151-0271-00
Q572	151-0220-00			TRANSISTOR:SILICON,PNP	80009	151-0220-00
Q576	151-0220-00			TRANSISTOR:SILICON,PNP	80009	151-0220-00
Q682	151-0302-00			TRANSISTOR:SILICON,NPN	04713	2N2222A
Q686	151-0220-00			TRANSISTOR:SILICON,PNP	80009	151-0220-00
Q688	151-0503-00			TRANSISTOR:SCR,30V,0.8A	04713	2N5060
Q712A,B	151-1042-00			SEMICOND DVC SE:MATCHED PAIR FET	80009	151-1042-00
Q716	151-0362-00			TRANSISTOR:SILICON,PNP,SEL FROM 2N4258	80009	151-0362-00
Q728	151-0220-00			TRANSISTOR:SILICON,PNP	80009	151-0220-00
Q768	151-0223-00			TRANSISTOR:SILICON,NPN	80009	151-0223-00
Q778	151-0223-00			TRANSISTOR:SILICON,NPN	80009	151-0223-00
Q792	151-0367-00			TRANSISTOR:SILICON,NPN,SEL FROM 3571TP	80009	151-0367-00
Q794	151-0367-00			TRANSISTOR:SILICON,NPN,SEL FROM 3571TP	80009	151-0367-00
Q802	151-0221-00			TRANSISTOR:SILICON,PNP	80009	151-0221-00
Q804	151-0221-00			TRANSISTOR:SILICON,PNP	80009	151-0221-00
Q810	151-0367-00			TRANSISTOR:SILICON,NPN,SEL FROM 3571TP	80009	151-0367-00
Q816	151-0223-00			TRANSISTOR:SILICON,NPN	80009	151-0223-00
Q822	151-0221-00			TRANSISTOR:SILICON,PNP	80009	151-0221-00
Q852	151-0367-00			TRANSISTOR:SILICON,NPN,SEL FROM 3571TP	80009	151-0367-00
Q854	151-0283-00			TRANSISTOR:SILICON,NPN	07263	S032790
Q856	151-0221-00			TRANSISTOR:SILICON,PNP	80009	151-0221-00
Q858	151-0289-00			TRANSISTOR:SILICON,PNP	80009	151-0289-00
Q862	151-0354-00			TRANSISTOR:SILICON,PNP,DUAL	32293	ITS1200A
Q866	151-0224-00			TRANSISTOR:SILICON,NPN	80009	151-0224-00
Q868	151-0220-00			TRANSISTOR:SILICON,PNP	80009	151-0220-00
Q884 Q886	151-1042-00			SEMICOND DVC SE:MATCHED PAIR FET	80009	151-1042-00
Q888	151-0223-00	B010100	B010299	TRANSISTOR:SILICON,NPN	80009	151-0223-00
Q888	151-0437-00	B010300		TRANSISTOR:SILICON,NPN,SEL FROM 2N5769	80009	151-0437-00
Q892	151-0133-00	B010100	B010299	TRANSISTOR:SILICON,PNP	80009	151-0133-00
Q892	151-0301-00	B010300		TRANSISTOR:SILICON,PNP	04713	2N2907A
Q896	151-0133-00	B010100	B010299	TRANSISTOR:SILICON,PNP	80009	151-0133-00
Q896	151-0301-00	B010300		TRANSISTOR:SILICON,PNP	04713	2N2907A
Q902A,B	151-0139-00			TRANSISTOR:SILICON,NPN	80009	151-0139-00
Q904	151-0224-00			TRANSISTOR:SILICON,NPN	80009	151-0224-00
Q906	151-0302-00			TRANSISTOR:SILICON,NPN	04713	2N2222A
Q908	151-0302-00			TRANSISTOR:SILICON,NPN	04713	2N2222A
Q914	151-0302-00			TRANSISTOR:SILICON,NPN	04713	2N2222A
Q934	151-0220-00			TRANSISTOR:SILICON,PNP	80009	151-0220-00
Q936	151-0220-00			TRANSISTOR:SILICON,PNP	80009	151-0220-00
Q942	151-0220-00			TRANSISTOR:SILICON,PNP	80009	151-0220-00
Q944	151-0224-00			TRANSISTOR:SILICON,NPN	80009	151-0224-00
Q1012A,B	151-1042-00			SEMICOND DVC SE:MATCHED PAIR FET	80009	151-1042-00

http://manoman.sqhill.com

Ckt No.	Tektronix Part No.	Serial/Model No. Eff	Dscont	Name & Description	Mfr Code	Mfr Part Number
Q1016	151-0362-00			TRANSISTOR:SILICON,PNP,SEL FROM 2N4258	80009	151-0362-00
Q1028	151-0220-00			TRANSISTOR:SILICON,PNP	80009	151-0220-00
Q1068	151-0220-00			TRANSISTOR:SILICON,PNP	80009	151-0220-00
Q1070	151-0302-00			TRANSISTOR:SILICON,NPN	04713	2N2222A
Q1072	151-0223-00			TRANSISTOR:SILICON,NPN	80009	151-0223-00
Q1074	151-0221-00			TRANSISTOR:SILICON,PNP	80009	151-0221-00
Q1078	151-0223-00			TRANSISTOR:SILICON,NPN	80009	151-0223-00
Q1082	151-0367-00			TRANSISTOR:SILICON,NPN,SEL FROM 3571TP	80009	151-0367-00
Q1084	151-0221-00			TRANSISTOR:SILICON,PNP	80009	151-0221-00
Q1092	151-0221-00			TRANSISTOR:SILICON,PNP	80009	151-0221-00
Q1096	151-0221-00			TRANSISTOR:SILICON,PNP	80009	151-0221-00
Q1102	151-0219-00			TRANSISTOR:SILICON,PNP	80009	151-0219-00
Q1106	151-0367-00			TRANSISTOR:SILICON,NPN,SEL FROM 3571TP	80009	151-0367-00
Q1108	151-0223-00			TRANSISTOR:SILICON,NPN	80009	151-0223-00
Q1110	151-0367-00			TRANSISTOR:SILICON,NPN,SEL FROM 3571TP	80009	151-0367-00
Q1114	151-0367-00			TRANSISTOR:SILICON,NPN,SEL FROM 3571TP	80009	151-0367-00
Q1121	151-0221-00			TRANSISTOR:SILICON,PNP	80009	151-0221-00
Q1124	151-0221-00			TRANSISTOR:SILICON,PNP	80009	151-0221-00
Q1154	151-0160-00			TRANSISTOR:SILICON,NPN	80009	151-0160-00
Q1164	151-0285-00			TRANSISTOR:SILICON,PNP	80009	151-0285-00
Q1168	151-0302-00			TRANSISTOR:SILICON,NPN	04713	2N2222A
Q1172	151-0124-00			TRANSISTOR:SILICON,NPN,SEL FROM 2N3501	80009	151-0124-00
Q1174	151-0270-00			TRANSISTOR:SILICON,PNP	80009	151-0270-00
Q1182	151-0124-00			TRANSISTOR:SILICON,NPN,SEL FROM 2N3501	80009	151-0124-00
Q1184	151-0270-00			TRANSISTOR:SILICON,PNP	80009	151-0270-00
Q1192	151-0127-00			TRANSISTOR:SILICON,NPN	80009	151-0127-00
Q1196	151-0127-00			TRANSISTOR:SILICON,NPN	80009	151-0127-00
Q1202	151-0367-00			TRANSISTOR:SILICON,NPN,SEL FROM 3571TP	80009	151-0367-00
Q1204	151-0221-00			TRANSISTOR:SILICON,PNP	80009	151-0221-00
Q1206	151-0283-00			TRANSISTOR:SILICON,NPN	07263	S032790
Q1208	151-0289-00			TRANSISTOR:SILICON,PNP	80009	151-0289-00
Q1212	151-0220-00			TRANSISTOR:SILICON,PNP	80009	151-0220-00
Q1218	151-0224-00			TRANSISTOR:SILICON,NPN	80009	151-0224-00
Q1222	151-0220-00			TRANSISTOR:SILICON,PNP	80009	151-0220-00
Q1232 Q1234	151-1042-00			SEMICOND DVC SE:MATCHED PAIR FET	80009	151-1042-00
Q1236	151-0223-00	B010100	B010299	TRANSISTOR:SILICON,NPN	80009	151-0223-00
Q1236	151-0437-00	B010300		TRANSISTOR:SILICON,NPN,SEL FROM 2N5769	80009	151-0437-00
Q1238	151-0224-00			TRANSISTOR:SILICON,NPN	80009	151-0224-00
Q1252	151-0133-00	B010100	B010299	TRANSISTOR:SILICON,PNP	80009	151-0133-00
Q1252	151-0301-00	B010300		TRANSISTOR:SILICON,PNP	04713	2N2907A
Q1266	151-0220-00			TRANSISTOR:SILICON,PNP	80009	151-0220-00
Q1268	151-0220-00			TRANSISTOR:SILICON,PNP	80009	151-0220-00
Q1272	151-0220-00			TRANSISTOR:SILICON,PNP	80009	151-0220-00
Q1302	151-0224-00			TRANSISTOR:SILICON,NPN	80009	151-0224-00
Q1304	151-0220-00			TRANSISTOR:SILICON,PNP	80009	151-0220-00
Q1306	151-0220-00			TRANSISTOR:SILICON,PNP	80009	151-0220-00
Q1312	151-0223-00			TRANSISTOR:SILICON,NPN	80009	151-0223-00
Q1318	151-0221-00			TRANSISTOR:SILICON,PNP	80009	151-0221-00
Q1322	151-0220-00			TRANSISTOR:SILICON,PNP	80009	151-0220-00
Q1328	151-0220-00			TRANSISTOR:SILICON,PNP	80009	151-0220-00
Q1331	151-0224-00			TRANSISTOR:SILICON,NPN	80009	151-0224-00
Q1336	151-0223-00	B010100	B010301	TRANSISTOR:SILICON,NPN	80009	151-0223-00

http://manoman.sqhill.com

Ckt No.	Tektronix Part No.	Serial/Model No. Eff	Dscont	Name & Description	Mfr Code	Mfr Part Number
Q1336	151-0127-00	B010302		TRANSISTOR:SILICON,NPN	80009	151-0127-00
Q1338	151-0127-00			TRANSISTOR:SILICON,NPN	80009	151-0127-00
Q1342	151-0224-00			TRANSISTOR:SILICON,NPN	80009	151-0224-00
Q1356	151-0220-00			TRANSISTOR:SILICON,PNP	80009	151-0220-00
Q1358	151-0223-00			TRANSISTOR:SILICON,NPN	80009	151-0223-00
Q1362	151-0223-00			TRANSISTOR:SILICON,NPN	80009	151-0223-00
Q1364	151-0221-00			TRANSISTOR:SILICON,PNP	80009	151-0221-00
Q1366	151-0224-00			TRANSISTOR:SILICON,NPN	80009	151-0224-00
Q1372	151-0221-00			TRANSISTOR:SILICON,PNP	80009	151-0221-00
Q1374	151-0221-00			TRANSISTOR:SILICON,PNP	80009	151-0221-00
Q1378	151-0223-00			TRANSISTOR:SILICON,NPN	80009	151-0223-00
Q1482	151-0301-00			TRANSISTOR:SILICON,PNP	04713	2N2907A
Q1504	151-0220-00			TRANSISTOR:SILICON,PNP	80009	151-0220-00
Q1520	151-0220-00			TRANSISTOR:SILICON,PNP	80009	151-0220-00
Q1544	151-0341-00			TRANSISTOR:SILICON,NPN	07263	S040065
Q1546	151-0219-00			TRANSISTOR:SILICON,PNP	80009	151-0219-00
Q1548	151-0302-00			TRANSISTOR:SILICON,NPN	04713	2N2222A
Q1566	151-0220-00			TRANSISTOR:SILICON,PNP	80009	151-0220-00
Q1568	151-0341-00			TRANSISTOR:SILICON,NPN	07263	S040065
Q1582	151-0220-00			TRANSISTOR:SILICON,PNP	80009	151-0220-00
Q1590	151-0220-00			TRANSISTOR:SILICON,PNP	80009	151-0220-00
Q1594	151-0220-00			TRANSISTOR:SILICON,PNP	80009	151-0220-00
Q1614	151-0279-00			TRANSISTOR:SILICON,NPN	80009	151-0279-00
Q1618	151-0280-00			TRANSISTOR:SILICON,PNP	80009	151-0280-00
Q1716	151-0219-00			TRANSISTOR:SILICON,PNP	80009	151-0219-00
Q1718	151-0219-00			TRANSISTOR:SILICON,PNP	80009	151-0219-00
Q1728	151-0279-00			TRANSISTOR:SILICON,NPN	80009	151-0279-00
Q1732	151-0280-00			TRANSISTOR:SILICON,PNP	80009	151-0280-00
Q1736	151-0192-00			TRANSISTOR:SILICON,NPN,SEL FROM MPS6521	80009	151-0192-00
Q1742	151-0220-00			TRANSISTOR:SILICON,PNP	80009	151-0220-00
Q1748	151-0160-00			TRANSISTOR:SILICON,NPN	80009	151-0160-00
Q1750	151-0271-00			TRANSISTOR:SILICON,PNP	80009	151-0271-00
Q1752	151-0124-00			TRANSISTOR:SILICON,NPN,SEL FROM 2N3501	80009	151-0124-00
Q1772	151-0270-00			TRANSISTOR:SILICON,PNP	80009	151-0270-00
Q1774	151-0192-00			TRANSISTOR:SILICON,NPN,SEL FROM MPS6521	80009	151-0192-00
Q1834	151-0368-00			TRANSISTOR:SILICON,NPN	80009	151-0368-00
Q1840	151-0260-00			TRANSISTOR:SILICON,NPN	80009	151-0260-00
Q1844	151-0368-00			TRANSISTOR:SILICON,NPN	80009	151-0368-00
Q1846	151-0519-00			TRANSISTOR:SILICON,SCR	80009	151-0519-00
Q1900	151-0302-00			TRANSISTOR:SILICON,NPN	04713	2N2222A
Q1902	151-0302-00			TRANSISTOR:SILICON,NPN	04713	2N2222A
Q2046	151-0136-00			TRANSISTOR:SILICON,NPN	02735	35495
Q2056	151-0260-00			TRANSISTOR:SILICON,NPN	80009	151-0260-00
Q2066	151-0334-00			TRANSISTOR:SILICON,NPN	80009	151-0334-00
Q2076	151-0335-00	B010100	B143849	TRANSISTOR:SILICON,PNP	80009	151-0335-00
Q2076	151-0324-00	B143850		TRANSISTOR:SILICON,PNP	80009	151-0324-00
Q2086	151-0134-00			TRANSISTOR:SILICON,PNP	80009	151-0134-00
Q2106	151-0219-00	B010100	B142363	TRANSISTOR:SILICON,PNP	80009	151-0219-00
Q2106	151-0410-00	B142364		TRANSISTOR:SILICON,PNP	80009	151-0410-00
Q2112	151-0219-00	B010100	B142363	TRANSISTOR:SILICON,PNP	80009	151-0219-00
Q2112	151-0410-00	B142364		TRANSISTOR:SILICON,PNP	80009	151-0410-00
Q2114	151-0212-00			TRANSISTOR:SILICON,NPN	80009	151-0212-00
Q2124	151-0212-00			TRANSISTOR:SILICON,NPN	80009	151-0212-00

http://manoman.sqhill.com

Ckt No.	Tektronix Part No.	Serial/Model No. Eff	Dscont	Name & Description	Mfr Code	Mfr Part Number
R1[1]	317-0100-00			RES.,FXD,CMPSN:10 OHM,5%,0.125W	01121	BB1005
R3[1]	317-0100-00			RES.,FXD,CMPSN:10 OHM,5%,0.125W	01121	BB1005
R6	317-0361-00			RES.,FXD,CMPSN:360 OHM,5%,0.125W	01121	BB3615
R12[1]	315-0201-00			RES.,FXD,CMPSN:200 OHM,5%,0.25W	01121	CB2015
R14[1]	317-0680-00			RES.,FXD,CMPSN:68 OHM,5%,0.125W	01121	BB6805
R16[1]	317-0105-00			RES.,FXD,CMPSN:1M OHM,5%,0.125W	01121	BB1055
R17[1]	307-0106-00			RES.,FXD,CMPSN:4.7 OHM,5%,0.25W	01121	CB47G5
R18[1]	317-0620-00			RES.,FXD,CMPSN:62 OHM,5%,0.125W	01121	BB6205
R23[1]	317-0100-00			RES.,FXD,CMPSN:10 OHM,5%,0.125W	01121	BB1005
R26[1]	317-0240-00			RES.,FXD,CMPSN:24 OHM,5%,0.125W	01121	BB2405
R27[1]	317-0120-00			RES.,FXD,CMPSN:12 OHM,5%,0.125W	01121	BB1205
R28[1]	317-0120-00			RES.,FXD,CMPSN:12 OHM,5%,0.125W	01121	BB1205
R29[1]	317-0100-00			RES.,FXD,CMPSN:10 OHM,5%,0.125W	01121	BB1005
R31[1]	322-0481-01			RES.,FXD,FILM:1M OHM,0.5%,0.25W	75042	CEBT0-1004D
R32[1]	317-0100-00			RES.,FXD,CMPSN:10 OHM,5%,0.125W	01121	BB1005
R33[1]	315-0474-00			RES.,FXD,CMPSN:470K OHM,5%,0.25W	01121	CB4745
R36[1]	325-0048-00			RES.,FXD,FILM:1M OHM,1%,0.2W	75042	MMCT0-21R0F
R38[1]	325-0048-00			RES.,FXD,FILM:1M OHM,1%,0.2W	75042	MMCT0-21R0F
R40[1]	317-0122-00			RES.,FXD,CMPSN:1.2K OHM,5%,0.125W	01121	BB1225
R42[1]	317-0393-00			RES.,FXD,CMPSN:39K OHM,5%,0.125W	01121	BB3935
R43[1]	317-0560-00			RES.,FXD,CMPSN:56 OHM,5%,0.125W	01121	BB5605
R45[1]	311-1035-00			RES.,VAR,NONWIR:50K OHM,10%,0.50W	80740	62-62-3
R46[1]	315-0395-00			RES.,FXD,CMPSN:3.9M OHM,5%,0.25W	01121	CB3955
R47[1]	317-0824-00			RES.,FXD,CMPSN:820K OHM,5%,0.125W	01121	BB8245
R49[1]	317-0390-00			RES.,FXD,CMPSN:39 OHM,5%,0.125W	01121	BB3905
R50[1]	317-0101-00			RES.,FXD,CMPSN:100 OHM,5%,0.125W	01121	BB1015
R51[1]	317-0122-00			RES.,FXD,CMPSN:1.2K OHM,5%,0.125W	01121	BB1225
R53[1]	311-0643-00			RES.,VAR,NONWIR:50 OHM,10%,0.50W	80740	62-52-3
R54[1]	317-0910-00			RES.,FXD,CMPSN:91 OHM,5%,0.125W	01121	BB9105
R55[1]	311-0605-00			RES.,VAR,NONWIR:200 OHM,10%,0.50W	80740	62-54-3
R56[1]	317-0152-00			RES.,FXD,CMPSN:1.5K OHM,5%,0.125W	01121	BB1525
R57[1]	317-0431-00			RES.,FXD,CMPSN:430 OHM,5%,0.125W	01121	BB4315
R59[1]	317-0101-00			RES.,FXD,CMPSN:100 OHM,5%,0.125W	01121	BB1015
R60[1]	317-0390-00			RES.,FXD,CMPSN:39 OHM,5%,0.125W	01121	BB3905
R61[1]	317-0027-00			RES.,FXD,COMP:2.7 OHM,5%,0.125W	01121	BB2R705
R62[1]	317-0362-00			RES.,FXD,CMPSN:3.6K OHM,5%,0.125W	01121	BB3625
R63[1]	317-0390-00			RES.,FXD,CMPSN:39 OHM,5%,0.125W	01121	BB3905
R64[1]	317-0561-00			RES.,FXD,CMPSN:560 OHM,5%,0.125W	01121	BB5615
R65[1]	317-0332-00			RES.,FXD,CMPSN:3.3K OHM,5%,0.125W	01121	BB3325
R66[1]	317-0330-00	B010100	B020432X	RES.,FXD,CMPSN:33 OHM,5%,0.125W	01121	BB3305
R66[1]	317-0330-00	XB020436		RES.,FXD,CMPSN:33 OHM,5%,0.125W	01121	BB3305
R67[1]	317-0510-00			RES.,FXD,CMPSN:51 OHM,5%,0.125W	01121	BB5105
R68[1]	317-0102-00			RES.,FXD,CMPSN:1K OHM,5%,0.125W	01121	BB1025
R69[1]	317-0470-00			RES.,FXD,CMPSN:47 OHM,5%,0.125W	01121	BB4705
R70[1]	317-0330-00			RES.,FXD,CMPSN:33 OHM,5%,0.125W	01121	BB3305
R71[1]	317-0911-00			RES.,FXD,CMPSN:910 OHM,5%,0.125W	01121	BB9115
R72[1]	301-0820-00			RES.,FXD,CMPSN:82 OHM,5%,0.50W	01121	EB8205
R74[1]	317-0047-00			RES.,FXD,CMPSN:4.7 OHM,5%,0.125W	01121	BB47G5
R75[1]	317-0393-00			RES.,FXD,CMPSN:39K OHM,5%,0.125W	01121	BB3935
R76[1]	315-0205-00			RES.,FXD,CMPSN:2M OHM,5%,0.25W	01121	CB2055
R77[1]	317-0304-00			RES.,FXD,CMPSN:300K OHM,5%,0.125W	01121	BB3045
R78[1]	311-0698-00			RES.,VAR,NONWIR:1M OHM,10%,0.50W	73138	82P-66-0-105
R81[1]	321-0260-00			RES.,FXD,FILM:4.99K OHM,1%,0.125W	91637	MFF1816G49900F

[1] 485, 485-1 only

http://manoman.sqhill.com

Ckt No.	Tektronix Part No.	Serial/Model No. Eff	Dscont	Name & Description	Mfr Code	Mfr Part Number
R82[1]	315-0100-00			RES.,FXD,CMPSN:10 OHM,5%,0.25W	01121	CB1005
R83[1]	315-0103-00			RES.,FXD,CMPSN:10K OHM,5%,0.25W	01121	CB1035
R84	321-0094-00			RES.,FXD,FILM:93.1 OHM,1%,0.125W	91637	MFF1816G93R10F
R87	317-0201-00	B010100	B109999	RES.,FXD,CMPSN:200 OHM,5%,0.125W	01121	BB2015
R87	317-0181-00	B110000		RES.,FXD,CMPSN:180 OHM,5%,0.125W	01121	BB1815
R90[2]	311-0566-00			RES.,VAR,NONWIR:5K OHM,20%	12697	381-CM39672
R93	315-0621-00			RES.,FXD,CMPSN:620 OHM,5%,0.25W	01121	CB6215
R96	317-0220-00			RES.,FXD,CMPSN:22 OHM,5%,0.125W	01121	BB2205
R101	317-0394-00			RES.,FXD,CMPSN:390K OHM,5%,0.125W	01121	BB3945
R102	317-0394-00			RES.,FXD,CMPSN:390K OHM,5%,0.125W	01121	BB3945
R104	317-0510-00			RES.,FXD,CMPSN:51 OHM,5%,0.125W	01121	BB5105
R107	321-0286-00			RES.,FXD,FILM:9.31K OHM,1%,0.125W	91637	MFF1816G93100F
R111	322-0692-03			RES.,FXD,FILM:122.2 OHM,0.25%,0.25W	91637	MFF1421D122R2C
R112	322-0692-03			RES.,FXD,FILM:122.2 OHM,0.25%,0.25W	91637	MFF1421D122R2C
R113	321-0938-03			RES.,FXD,FILM:247.5 OHM,0.25%,0.125W	91637	MFF1816D247R5C
R114	321-0939-03			RES.,FXD,FILM:122.2 OHM,0.25%,0.125W	91637	MFF1816D122R2C
R115	321-0939-03			RES.,FXD,FILM:122.2 OHM,0.25%,0.125W	91637	MFF1816D122R2C
R121	321-0939-03			RES.,FXD,FILM:122.2 OHM,0.25%,0.125W	91637	MFF1816D122R2C
R122	321-0939-03			RES.,FXD,FILM:122.2 OHM,0.25%,0.125W	91637	MFF1816D122R2C
R123	321-0938-03			RES.,FXD,FILM:247.5 OHM,0.25%,0.125W	91637	MFF1816D247R5C
R124	321-0939-03			RES.,FXD,FILM:122.2 OHM,0.25%,0.125W	91637	MFF1816D122R2C
R125	321-0939-03			RES.,FXD,FILM:122.2 OHM,0.25%,0.125W	91637	MFF1816D122R2C
R127[1]	317-0510-00			RES.,FXD,CMPSN:51 OHM,5%,0.125W	01121	BB5105
R131	321-0808-03			RES.,FXD,FILM:800 OHM,0.25%,0.125W	91637	MFF1816D300R0C
R132	321-0808-03			RES.,FXD,FILM:800 OHM,0.25%,0.125W	91637	MFF1816D300R0C
R133	321-0085-03			RES.,FXD,FILM:75 OHM,0.25%,0.125W	91637	MFF1816D75R00C
R134	321-0085-03			RES.,FXD,FILM:75 OHM,0.25%,0.125W	91637	MFF1816D75R00C
R135	321-0114-03			RES.,FXD,FILM:150 OHM,0.25%,0.125W	91637	MFF1816D150R0C
R141	321-0940-03			RES.,FXD,FILM:116.7 OHM,0.25%,0.125W	91637	MFF1816D116R7C
R143	325-0108-00			RES.,FXD,FILM:105 OHM,0.5%,0.05W	14298	AME50-C105R0D
R144	325-0108-00			RES.,FXD,FILM:105 OHM,0.5%,0.05W	14298	AME50-C105R0D
R145	321-0940-03			RES.,FXD,FILM:116.7 OHM,0.25%,0.125W	91637	MFF1816D116R7C
R201	323-0172-06			RES.,FXD,FILM:604 OHM,0.25%,0.50W	91637	MFF1226C604R0C
R204	323-0172-06			RES.,FXD,FILM:604 OHM,0.25%,0.50W	91637	MFF1226C604R0C
R205	316-0101-00			RES.,FXD,CMPSN:100 OHM,10%,0.25W	01121	CB1011
R206	311-1228-00			RES.,VAR,NONWIR:10K OHM,20%,0.50W	32997	3386F-T04-103
R207	315-0153-00			RES.,FXD,CMPSN:15K OHM,5%,0.25W	01121	CB1535
R208	311-0635-00			RES.,VAR,NONWIR:1K OHM,10%,0.50W	73138	82-32-0
R209	321-0073-00			RES.,FXD,FILM:56.2 OHM,1%,0.125W	91637	MFF1816G56R20F
R212	321-0136-00	B010100	B119999	RES.,FXD,FILM:255 OHM,1%,0.125W	91637	MFF1816G255R0F
R212	321-0139-00	B120000		RES.,FXD,FILM:274 OHM,1%,0.125W	91637	MFF1816G274R0F
R213	321-0136-00	B010100	B119999	RES.,FXD,FILM:255 OHM,1%,0.125W	91637	MFF1816G255R0F
R213	321-0139-00	B120000		RES.,FXD,FILM:274 OHM,1%,0.125W	91637	MFF1816G274R0F
R214	311-0605-00			RES.,VAR,NONWIR:200 OHM,10%,0.50W	80740	62-54-3
R215	311-0643-00	B010100	B119999	RES.,VAR,NONWIR:50 OHM,10%,0.50W	80740	62-52-3
R215	311-1007-00	B120000		RES.,VAR,NONWIR:20 OHM,20%,0.50W	73138	82-38-0
R217	315-0430-00			RES.,FXD,CMPSN:43 OHM,5%,0.25W	01121	CB4305
R220	311-0091-00			RES.,VAR,NONWIR:1K OHM,10%,0.50W	01121	W-3083E
R221	315-0681-00	B010100	B144129	RES.,FXD,CMPSN:680 OHM,5%,0.25W	01121	CB6815
R221	315-0621-00	B144130		RES.,FXD,CMPSN:620 OHM,5%,0.25W	01121	CB6215
R223	315-0562-00			RES.,FXD,CMPSN:5.6K OHM,5%,0.25W	01121	CB5625
R225	321-0273-00			RES.,FXD,FILM:6.81K OHM,1%,0.125W	91637	MFF1816G68100F
R226	321-0320-00			RES.,FXD,FILM:21K OHM,1%,0.125W	91637	MFF1816G21001F

[1] 485, 485-1 only
[2] Furnished as a unit with S90.

http://manoman.sqhill.com

Ckt No.	Tektronix Part No.	Serial/Model No. Eff	Dscont	Name & Description	Mfr Code	Mfr Part Number
R227	321-0273-00			RES.,FXD,FILM:6.81K OHM,1%,0.125W	91637	MFF1816G68100F
R228	321-0246-00			RES.,FXD,FILM:3.57K OHM,1%,0.125W	91637	MFF1816G35700F
R230	311-0091-00			RES.,VAR,NONWIR:1K OHM,10%,0.50W	01121	W-3083E
R240	311-0978-00			RES.,VAR,NONWIR:250 OHM,10%,0.50W	80740	62-67-3
R242	307-0115-00			RES.,FXD,CMPSN:7.5 OHM,5%,0.25W	01121	CB75G5
R244	325-0053-00			RES.,FXD,FILM:50 OHM,1%,0.05W	03888	PME50C50R00F
R247	325-0053-00			RES.,FXD,FILM:50 OHM,1%,0.05W	03888	PME50C50R00F
R250	311-0643-00			RES.,VAR,NONWIR:50 OHM,10%,0.50W	80740	62-52-3
R251	321-0124-00			RES.,FXD,FILM:191 OHM,1%,0.125W	91637	MFF1816G191R0F
R252	321-0124-00			RES.,FXD,FILM:191 OHM,1%,0.125W	91637	MFF1816G191R0F
R253	317-0112-00			RES.,FXD,CMPSN:1.1K OHM,5%,0.125W	01121	BB1125
R254	317-0102-00			RES.,FXD,CMPSN:1K OHM,5%,0.125W	01121	BB1025
R255	311-0635-00			RES.,VAR,NONWIR:1K OHM,10%,0.50W	73138	82-32-0
R257	317-0112-00			RES.,FXD,CMPSN:1.1K OHM,5%,0.125W	01121	BB1125
R262	315-0243-00			RES.,FXD,CMPSN:24K OHM,5%,0.25W	01121	CB2435
R265	321-0174-00			RES.,FXD,FILM:634 OHM,1%,0.125W	91637	MFF1816G634R0F
R266	321-0149-00			RES.,FXD,FILM:348 OHM,1%,0.125W	91637	MFF1816G348R0F
R267	315-0510-00			RES.,FXD,CMPSN:51 OHM,5%,0.25W	01121	CB5105
R268	315-0510-00			RES.,FXD,CMPSN:51 OHM,5%,0.25W	01121	CB5105
R269	315-0300-00	B010100	B049999	RES.,FXD,CMPSN:30 OHM,5%,0.25W	01121	CB3005
R269	315-0430-00	B050000		RES.,FXD,CMPSN:43 OHM,5%,0.25W	01121	CB4305
R270	311-1197-00			RES.,VAR,NONWIR:20K OHM,10%,1W	12697	381-CM39696
R271	321-0330-00	B010100	B049999	RES.,FXD,FILM:26.7K OHM,1%,0.125W	91637	MFF1816G26701F
R271	321-0332-00	B050000		RES.,FXD,FILM:28K OHM,1%,0.125W	91637	MFF1816G28001F
R272	321-0220-00			RES.,FXD,FILM:1.91K OHM,1%,0.125W	91637	MFF1816G19100F
R273	315-0752-00			RES.,FXD,CMPSN:7.5K OHM,5%,0.25W	01121	CB7525
R274	321-0189-00			RES.,FXD,FILM:909 OHM,1%,0.125W	91637	MFF1816G909R0F
R275	311-0633-00			RES.,VAR,NONWIR:5K OHM,10%,0.50W	73138	82-30-0
R276	321-0193-00			RES.,FXD,FILM:1K OHM,1%,0.125W	91637	MFF1816G10000F
R279	321-0097-00			RES.,FXD,FILM:100 OHM,1%,0.125W	91637	MFF1816G100R0F
R282	315-0152-00			RES.,FXD,CMPSN:1.5K OHM,5%,0.25W	01121	CB1525
R284	321-0189-00			RES.,FXD,FILM:909 OHM,1%,0.125W	91637	MFF1816G909R0F
R286	321-0193-00			RES.,FXD,FILM:1K OHM,1%,0.125W	91637	MFF1816G10000F
R287	315-0271-00			RES.,FXD,CMPSN:270 OHM,5%,0.25W	01121	CB2715
R289	315-0363-00			RES.,FXD,CMPSN:36K OHM,5%,0.25W	01121	CB3635
R290	311-0702-00			RES.,VAR,NONWIR:250 OHM,10%,0.50W	11237	300SF-3P1622
R291	301-0431-00			RES.,FXD,CMPSN:430 OHM,5%,0.50W	01121	EB4315
R301	323-0172-06			RES.,FXD,FILM:604 OHM,0.25%,0.50W	91637	MFF1226C604R0C
R304	323-0172-06			RES.,FXD,FILM:604 OHM,0.25%,0.50W	91637	MFF1226C604R0C
R305	316-0101-00			RES.,FXD,CMPSN:100 OHM,10%,0.25W	01121	CB1011
R306	311-1228-00			RES.,VAR,NONWIR:10K OHM,20%,0.50W	32997	3386F-T04-103
R307	315-0153-00			RES.,FXD,CMPSN:15K OHM,5%,0.25W	01121	CB1535
R308	311-0635-00			RES.,VAR,NONWIR:1K OHM,10%,0.50W	73138	82-32-0
R309	321-0073-00			RES.,FXD,FILM:56.2 OHM,1%,0.125W	91637	MFF1816G56R20F
R310	311-0622-00	B010100	B119999	RES.,VAR,NONWIR:100 OHM,10%,0.50W	32997	3326H-G48-101
R310	311-0643-00	B120000		RES.,VAR,NONWIR:50 OHM,10%,0.50W	80740	62-52-3
R312	311-0622-00	B010100	B119999	RES.,VAR,NONWIR:100 OHM,10%,0.50W	32997	3326H-G48-101
R312	311-0643-00	B120000		RES.,VAR,NONWIR:50 OHM,10%,0.50W	80740	62-52-3
R313	321-0132-00	B010100	B119999	RES.,FXD,FILM:232 OHM,1%,0.125W	91637	MFF1816G232R0F
R313	321-0136-00	B120000		RES.,FXD,FILM:255 OHM,1%,0.125W	91637	MFF1816G255R0F
R314	321-0132-00	B010100	B119999	RES.,FXD,FILM:232 OHM,1%,0.125W	91637	MFF1816G232R0F
R314	321-0136-00	B120000		RES.,FXD,FILM:255 OHM,1%,0.125W	91637	MFF1816G255R0F
R315	311-0605-00			RES.,VAR,NONWIR:200 OHM,10%,0.50W	80740	62-54-3

http://manoman.sqhill.com

Ckt No.	Tektronix Part No.	Serial/Model No. Eff	Dscont	Name & Description	Mfr Code	Mfr Part Number
R316	315-0430-00			RES.,FXD,CMPSN:43 OHM,5%,0.25W	01121	CB4305
R317	321-0254-00			RES.,FXD,FILM:4.32K OHM,1%,0.125W	91637	MFF1816G43200F
R318	311-0660-00			RES.,VAR,NONWIR:200K OHM,30%,0.50W	80294	3326H-G48-204
R319	321-0254-00			RES.,FXD,FILM:4.32K OHM,1%,0.125W	91637	MFF1816G43200F
R320	315-0224-00			RES.,FXD,CMPSN:220K OHM,5%,0.25W	01121	CB2245
R321	315-0681-00	B010100	B144129	RES.,FXD,CMPSN:680 OHM,5%,0.25W	01121	CB6815
R321	315-0621-00	B144130		RES.,FXD,CMPSN:620 OHM,5%,0.25W	01121	CB6215
R323	315-0562-00			RES.,FXD,CMPSN:5.6K OHM,5%,0.25W	01121	CB5625
R325	321-0273-00			RES.,FXD,FILM:6.81K OHM,1%,0.125W	91637	MFF1816G68100F
R326	321-0320-00			RES.,FXD,FILM:21K OHM,1%,0.125W	91637	MFF1816G21001F
R327	321-0273-00			RES.,FXD,FILM:6.81K OHM,1%,0.125W	91637	MFF1816G68100F
R328	321-0320-00			RES.,FXD,FILM:21K OHM,1%,0.125W	91637	MFF1816G21001F
R332	321-0339-00			RES.,FXD,FILM:33.2K OHM,1%,0.125W	91637	MFF1816G33201F
R333	321-0308-00			RES.,FXD,FILM:15.8K OHM,1%,0.125W	91637	MFF1816G15801F
R340	311-0978-00			RES.,VAR,NONWIR:250 OHM,10%,0.50W	80740	62-67-3
R342	307-0115-00			RES.,FXD,CMPSN:7.5 OHM,5%,0.25W	01121	CB75G5
R344	325-0053-00			RES.,FXD,FILM:50 OHM,1%,0.05W	03888	PME50C50R00F
R347	325-0053-00			RES.,FXD,FILM:50 OHM,1%,0.05W	03888	PME50C50R00F
R350	311-0643-00			RES.,VAR,NONWIR:50 OHM,10%,0.50W	80740	62-52-3
R353	321-0124-00			RES.,FXD,FILM:191 OHM,1%,0.125W	91637	MFF1816G191R0F
R354	321-0124-00			RES.,FXD,FILM:191 OHM,1%,0.125W	91637	MFF1816G191R0F
R355	317-0112-00			RES.,FXD,CMPSN:1.1K OHM,5%,0.125W	01121	BB1125
R356	317-0112-00			RES.,FXD,CMPSN:1.1K OHM,5%,0.125W	01121	BB1125
R357	317-0102-00			RES.,FXD,CMPSN:1K OHM,5%,0.125W	01121	BB1025
R358	311-0635-00			RES.,VAR,NONWIR:1K OHM,10%,0.50W	73138	82-32-0
R362	315-0243-00			RES.,FXD,CMPSN:24K OHM,5%,0.25W	01121	CB2435
R365	321-0174-00			RES.,FXD,FILM:634 OHM,1%,0.125W	91637	MFF1816G634R0F
R366	321-0149-00			RES.,FXD,FILM:348 OHM,1%,0.125W	91637	MFF1816G348R0F
R367	315-0510-00			RES.,FXD,CMPSN:51 OHM,5%,0.25W	01121	CB5105
R368	315-0510-00			RES.,FXD,CMPSN:51 OHM,5%,0.25W	01121	CB5105
R369	315-0300-00	B010100	B049999	RES.,FXD,CMPSN:30 OHM,5%,0.25W	01121	CB3005
R369	315-0430-00	B050000		RES.,FXD,CMPSN:43 OHM,5%,0.25W	01121	CB4305
R370	311-1197-00			RES.,VAR,NONWIR:20K OHM,10%,1W	12697	381-CM39696
R371	321-0330-00	B010100	B049999	RES.,FXD,FILM:26.7K OHM,1%,0.125W	91637	MFF1816G26701F
R371	321-0332-00	B050000		RES.,FXD,FILM:28K OHM,1%,0.125W	91637	MFF1816G28001F
R372	321-0220-00			RES.,FXD,FILM:1.91K OHM,1%,0.125W	91637	MFF1816G19100F
R373	315-0752-00			RES.,FXD,CMPSN:7.5K OHM,5%,0.25W	01121	CB7525
R374	321-0189-00			RES.,FXD,FILM:909 OHM,1%,0.125W	91637	MFF1816G909R0F
R375	311-0633-00			RES.,VAR,NONWIR:5K OHM,10%,0.50W	73138	82-30-0
R376	321-0193-00			RES.,FXD,FILM:1K OHM,1%,0.125W	91637	MFF1816G10000F
R379	321-0097-00			RES.,FXD,FILM:100 OHM,1%,0.125W	91637	MFF1816G100R0F
R382	315-0152-00			RES.,FXD,CMPSN:1.5K OHM,5%,0.25W	01121	CB1525
R384	321-0189-00			RES.,FXD,FILM:909 OHM,1%,0.125W	91637	MFF1816G909R0F
R386	321-0193-00			RES.,FXD,FILM:1K OHM,1%,0.125W	91637	MFF1816G10000F
R387	315-0271-00			RES.,FXD,CMPSN:270 OHM,5%,0.25W	01121	CB2715
R389	315-0363-00			RES.,FXD,CMPSN:36K OHM,5%,0.25W	01121	CB3635
R403	321-0114-00			RES.,FXD,FILM:150 OHM,1%,0.125W	91637	MFF1816G150R0F
R404	321-0114-00			RES.,FXD,FILM:150 OHM,1%,0.125W	91637	MFF1816G150R0F
R407	317-0100-00			RES.,FXD,CMPSN:10 OHM,5%,0.125W	01121	BB1005
R408	317-0100-00			RES.,FXD,CMPSN:10 OHM,5%,0.125W	01121	BB1005
R409	317-0241-00			RES.,FXD,CMPSN:240 OHM,5%,0.125W	01121	BB2415
R411	321-0001-00			RES.,FXD,FILM:10 OHM,1%,0.125W	75042	CEAT0-10R00F
R412	321-0016-00			RES.,FXD,FILM:14.3 OHM,1%,0.125W	91637	MFF1816G14R30F

http://manoman.sqhill.com

Ckt No.	Tektronix Part No.	Serial/Model No. Eff	Dscont	Name & Description	Mfr Code	Mfr Part Number
R413	315-0102-00			RES.,FXD,CMPSN:1K OHM,5%,0.25W	01121	CB1025
R414	321-0175-00			RES.,FXD,FILM:649 OHM,1%,0.125W	91637	MFF1816G649R0F
R415	321-0126-00			RES.,FXD,FILM:200 OHM,1%,0.125W	91637	MFF1816G200R0F
R416	321-0184-00			RES.,FXD,FILM:806 OHM,1%,0.125W	91637	MFF1816G806R0F
R417	321-0122-00			RES.,FXD,FILM:182 OHM,1%,0.125W	91637	MFF1816G182R0F
R418	321-0097-00			RES.,FXD,FILM:100 OHM,1%,0.125W	91637	MFF1816G100R0F
R419	321-0097-00			RES.,FXD,FILM:100 OHM,1%,0.125W	91637	MFF1816G100R0F
R423	321-0114-00			RES.,FXD,FILM:150 OHM,1%,0.125W	91637	MFF1816G150R0F
R424	321-0114-00			RES.,FXD,FILM:150 OHM,1%,0.125W	91637	MFF1816G150R0F
R427	317-0100-00			RES.,FXD,CMPSN:10 OHM,5%,0.125W	01121	BB1005
R428	317-0100-00			RES.,FXD,CMPSN:10 OHM,5%,0.125W	01121	BB1005
R433	315-0102-00			RES.,FXD,CMPSN:1K OHM,5%,0.25W	01121	CB1025
R434	321-0175-00			RES.,FXD,FILM:649 OHM,1%,0.125W	91637	MFF1816G649R0F
R435	321-0126-00			RES.,FXD,FILM:200 OHM,1%,0.125W	91637	MFF1816G200R0F
R436	321-0184-00			RES.,FXD,FILM:806 OHM,1%,0.125W	91637	MFF1816G806R0F
R437	321-0122-00			RES.,FXD,FILM:182 OHM,1%,0.125W	91637	MFF1816G182R0F
R438	321-0101-00			RES.,FXD,FILM:110 OHM,1%,0.125W	91637	MFF1816G110R0F
R439	321-0101-00			RES.,FXD,FILM:110 OHM,1%,0.125W	91637	MFF1816G110R0F
R440	321-0197-00			RES.,FXD,FILM:1.1K OHM,1%,0.125W	91637	MFF1816G11000F
R441	321-0292-00			RES.,FXD,FILM:10.7K OHM,1%,0.125W	91637	MFF1816G10701F
R442	321-0254-00			RES.,FXD,FILM:4.32K OHM,1%,0.125W	91637	MFF1816G43200F
R444	321-0260-00			RES.,FXD,FILM:4.99K OHM,1%,0.125W	91637	MFF1816G49900F
R446	321-0218-00			RES.,FXD,FILM:1.82K OHM,1%,0.125W	91637	MFF1816G18200F
R448	321-0260-00			RES.,FXD,FILM:4.99K OHM,1%,0.125W	91637	MFF1816G49900F
R449	315-0164-00			RES.,FXD,CMPSN:160K OHM,5%,0.25W	01121	CB1645
R450	311-0642-00			RES.,VAR,NONWIR:20K OHM,20%,0.50W	12697	382-CM39820
R451	321-0300-00			RES.,FXD,FILM:13K OHM,1%,0.125W	91637	MFF1816G13001F
R452	321-0222-00			RES.,FXD,FILM:2K OHM,1%,0.125W	91637	MFF1816G20000F
R453	321-0218-00			RES.,FXD,FILM:1.82K OHM,1%,0.125W	91637	MFF1816G18200F
R454	321-0254-00			RES.,FXD,FILM:4.32K OHM,1%,0.125W	91637	MFF1816G43200F
R456	321-0197-00			RES.,FXD,FILM:1.1K OHM,1%,0.125W	91637	MFF1816G11000F
R457	321-0292-00			RES.,FXD,FILM:10.7K OHM,1%,0.125W	91637	MFF1816G10701F
R458	315-0101-00			RES.,FXD,CMPSN:100 OHM,5%,0.25W	01121	CB1015
R461	321-0240-00			RES.,FXD,FILM:3.09K OHM,1%,0.125W	91637	MFF1816G30900F
R464	321-0293-00			RES.,FXD,FILM:11K OHM,1%,0.125W	91637	MFF1816G11001F
R465	315-0302-00			RES.,FXD,CMPSN:3K OHM,5%,0.25W	01121	CB3025
R466	321-0289-00			RES.,FXD,FILM:10K OHM,1%,0.125W	91637	MFF1816G10001F
R468	315-0622-00			RES.,FXD,CMPSN:6.2K OHM,5%,0.25W	01121	CB6225
R503	321-0126-00			RES.,FXD,FILM:200 OHM,1%,0.125W	91637	MFF1816G200R0F
R504	321-0126-00			RES.,FXD,FILM:200 OHM,1%,0.125W	91637	MFF1816G200R0F
R505	311-0635-00			RES.,VAR,NONWIR:1K OHM,10%,0.50W	73138	82-32-0
R508	321-0068-00			RES.,FXD,FILM:49.9 OHM,1%,0.125W	91637	MFF1816G49R90F
R509	321-0068-00			RES.,FXD,FILM:49.9 OHM,1%,0.125W	91637	MFF1816G49R90F
R511	321-0051-00			RES.,FXD,FILM:33.2 OHM,1%,0.125W	91637	MFF1816G33R20F
R512	307-0109-00			RES.,FXD,CMPSN:8.2 OHM,5%,0.25W	01121	CB82G5
R513	315-0102-00			RES.,FXD,CMPSN:1K OHM,5%,0.25W	01121	CB1025
R514	321-0175-00			RES.,FXD,FILM:649 OHM,1%,0.125W	91637	MFF1816G649R0F
R515	321-0126-00			RES.,FXD,FILM:200 OHM,1%,0.125W	91637	MFF1816G200R0F
R516	321-0184-00			RES.,FXD,FILM:806 OHM,1%,0.125W	91637	MFF1816G806R0F
R517	321-0122-00			RES.,FXD,FILM:182 OHM,1%,0.125W	91637	MFF1816G182R0F
R518	321-0097-00			RES.,FXD,FILM:100 OHM,1%,0.125W	91637	MFF1816G100R0F
R523	321-0126-00			RES.,FXD,FILM:200 OHM,1%,0.125W	91637	MFF1816G200R0F
R524	321-0126-00			RES.,FXD,FILM:200 OHM,1%,0.125W	91637	MFF1816G200R0F

http://manoman.sqhill.com

Ckt No.	Tektronix Part No.	Serial/Model No. Eff	Dscont	Name & Description	Mfr Code	Mfr Part Number
R525	315-0221-00			RES.,FXD,CMPSN:220 OHM,5%,0.25W	01121	CB2215
R528	321-0068-00			RES.,FXD,FILM:49.9 OHM,1%,0.125W	91637	MFF1816G49R90F
R529	321-0068-00			RES.,FXD,FILM:49.9 OHM,1%,0.125W	91637	MFF1816G49R90F
R531	321-0051-00			RES.,FXD,FILM:33.2 OHM,1%,0.125W	91637	MFF1816G33R20F
R532	307-0109-00			RES.,FXD,CMPSN:8.2 OHM,5%,0.25W	01121	CB82G5
R533	315-0102-00			RES.,FXD,CMPSN:1K OHM,5%,0.25W	01121	CB1025
R534	321-0175-00			RES.,FXD,FILM:649 OHM,1%,0.125W	91637	MFF1816G649R0F
R535	321-0126-00			RES.,FXD,FILM:200 OHM,1%,0.125W	91637	MFF1816G200R0F
R536	321-0184-00			RES.,FXD,FILM:806 OHM,1%,0.125W	91637	MFF1816G806R0F
R537	321-0122-00			RES.,FXD,FILM:182 OHM,1%,0.125W	91637	MFF1816G182R0F
R538	321-0097-00			RES.,FXD,FILM:100 OHM,1%,0.125W	91637	MFF1816G100R0F
R541	321-0097-00			RES.,FXD,FILM:100 OHM,1%,0.125W	91637	MFF1816G100R0F
R542	321-0097-00			RES.,FXD,FILM:100 OHM,1%,0.125W	91637	MFF1816G100R0F
R543	315-0330-00			RES.,FXD,CMPSN:33 OHM,5%,0.25W	01121	CB3305
R544	321-0114-00			RES.,FXD,FILM:150 OHM,1%,0.125W	91637	MFF1816G150R0F
R545	317-0111-00			RES.,FXD,CMPSN:110 OHM,5%,0.125W	01121	BB1115
R546	321-0114-00			RES.,FXD,FILM:150 OHM,1%,0.125W	91637	MFF1816G150R0F
R547	321-0140-00			RES.,FXD,FILM:280 OHM,1%,0.125W	91637	MFF1816G280R0F
R549	321-0129-00			RES.,FXD,FILM:215 OHM,1%,0.125W	91637	MFF1816G215R0F
R550	317-0301-00			RES.,FXD,CMPSN:300 OHM,5%,0.125W	01121	BB3015
R552	315-0471-00			RES.,FXD,CMPSN:470 OHM,5%,0.25W	01121	CB4715
R553	315-0223-00			RES.,FXD,CMPSN:22K OHM,5%,0.25W	01121	CB2235
R554	315-0223-00			RES.,FXD,CMPSN:22K OHM,5%,0.25W	01121	CB2235
R555	315-0471-00			RES.,FXD,CMPSN:470 OHM,5%,0.25W	01121	CB4715
R556	315-0101-00			RES.,FXD,CMPSN:100 OHM,5%,0.25W	01121	CB1015
R557	321-1087-01			RES.,FXD,FILM:79.6 OHM,0.5%,0.125W	91637	MFF1816G79R60D
R558	315-0222-00			RES.,FXD,CMPSN:2.2K OHM,5%,0.25W	01121	CB2225
R559	321-1087-01			RES.,FXD,FILM:79.6 OHM,0.5%,0.125W	91637	MFF1816G79R60D
R560	311-1227-00			RES.,VAR,NONWIR:5K OHM,20%,0.50W	32997	3386F-T04-502
R562	321-0139-00			RES.,FXD,FILM:274 OHM,1%,0.125W	91637	MFF1816G274R0F
R563	315-0430-00	B010100	B089999	RES.,FXD,CMPSN:43 OHM,5%,0.25W	01121	CB4305
R563	315-0470-00	B090000		RES.,FXD,CMPSN:47 OHM,5%,0.25W	01121	CB4705
R565	315-0430-00	B010100	B089999	RES.,FXD,CMPSN:43 OHM,5%,0.25W	01121	CB4305
R565	315-0470-00	B090000		RES.,FXD,CMPSN:47 OHM,5%,0.25W	01121	CB4705
R566	321-0152-00			RES.,FXD,FILM:374 OHM,1%,0.125W	91637	MFF1816G374R0F
R567	321-0193-00			RES.,FXD,FILM:1K OHM,1%,0.125W	91637	MFF1816G10000F
R568	315-0101-00			RES.,FXD,CMPSN:100 OHM,5%,0.25W	01121	CB1015
R570	321-0222-00			RES.,FXD,FILM:2K OHM,1%,0.125W	91637	MFF1816G20000F
R571	321-0168-00			RES.,FXD,FILM:549 OHM,1%,0.125W	91637	MFF1816G549R0F
R572	307-0108-00			RES.,FXD,CMPSN:6.8 OHM,5%,0.25W	80009	307-0108-00
R574	315-0620-00			RES.,FXD,CMPSN:62 OHM,5%,0.25W	01121	CB6205
R575	311-1222-00			RES.,VAR,NONWIR:100 OHM,20%,0.50W	32997	3386F-T04-101
R576	321-0168-00			RES.,FXD,FILM:549 OHM,1%,0.125W	91637	MFF1816G549R0F
R577	315-0221-00			RES.,FXD,CMPSN:220 OHM,5%,0.25W	01121	CB2215
R578	321-0222-00			RES.,FXD,FILM:2K OHM,1%,0.125W	91637	MFF1816G20000F
R579	321-0193-00			RES.,FXD,FILM:1K OHM,1%,0.125W	91637	MFF1816G10000F
R600	311-1007-00			RES.,VAR,NONWIR:20 OHM,20%,0.50W	73138	82-38-0
R601	315-0751-00			RES.,FXD,CMPSN:750 OHM,5%,0.25W	01121	CB7515
R602	322-0091-00			RES.,FXD,FILM:86.6 OHM,1%,0.25W	91637	MFF1421G86R60F
R603	321-0097-00			RES.,FXD,FILM:100 OHM,1%,0.125W	91637	MFF1816G100R0F
R604	321-0097-00			RES.,FXD,FILM:100 OHM,1%,0.125W	91637	MFF1816G100R0F
R606	311-0607-00			RES.,VAR,NONWIR:10K OHM,10%,0.50W	73138	82P-59-4-103K
R607	311-0633-00			RES.,VAR,NONWIR:5K OHM,10%,0.50W	73138	82-30-0

http://manoman.sqhill.com

Ckt No.	Tektronix Part No.	Serial/Model No. Eff	Dscont	Name & Description	Mfr Code	Mfr Part Number
R608	311-1265-00			RES.,VAR,NONWIR:2K OHM,10%,0.50W	32997	3329P-L58-202
R609	311-1265-00			RES.,VAR,NONWIR:2K OHM,10%,0.50W	32997	3329P-L58-202
R610	321-0300-00			RES.,FXD,FILM:13K OHM,1%,0.125W	91637	MFF1816G13001F
R611	317-0200-00			RES.,FXD,CMPSN:20 OHM,5%,0.125W	01121	BB2005
R612	317-0200-00			RES.,FXD,CMPSN:20 OHM,5%,0.125W	01121	BB2005
R613	311-1265-00			RES.,VAR,NONWIR:2K OHM,10%,0.50W	32997	3329P-L58-202
R614	311-1265-00			RES.,VAR,NONWIR:2K OHM,10%,0.50W	32997	3329P-L58-202
R615	311-0605-00			RES.,VAR,NONWIR:200 OHM,10%,0.50W	80740	62-54-3
R616	321-0300-00			RES.,FXD,FILM:13K OHM,1%,0.125W	91637	MFF1816G13001F
R621	321-0068-00			RES.,FXD,FILM:49.9 OHM,1%,0.125W	91637	MFF1816G49R90F
R622	315-0561-00			RES.,FXD,CMPSN:560 OHM,5%,0.25W	01121	CB5615
R623	315-0821-00			RES.,FXD,CMPSN:820 OHM,5%,0.25W	01121	CB8215
R624	315-0152-00			RES.,FXD,CMPSN:1.5K OHM,5%,0.25W	01121	CB1525
R625	321-0068-00			RES.,FXD,FILM:49.9 OHM,1%,0.125W	91637	MFF1816G49R90F
R626	316-0104-00	B010100	B039999X	RES.,FXD,CMPSN:100K OHM,10%,0.25W	01121	CB1041
R627	315-0101-00			RES.,FXD,CMPSN:100 OHM,5%,0.25W	01121	CB1015
R629	311-0635-00			RES.,VAR,NONWIR:1K OHM,10%,0.50W	73138	82-32-0
R633	321-0160-00			RES.,FXD,FILM:453 OHM,1%,0.125W	91637	MFF1816G453R0F
R634	321-0168-00			RES.,FXD,FILM:549 OHM,1%,0.125W	91637	MFF1816G549R0F
R635	315-0221-00			RES.,FXD,CMPSN:220 OHM,5%,0.25W	01121	CB2215
R636	315-0822-00			RES.,FXD,CMPSN:8.2K OHM,5%,0.25W	01121	CB8225
R637	315-0221-00			RES.,FXD,CMPSN:220 OHM,5%,0.25W	01121	CB2215
R638	315-0822-00			RES.,FXD,CMPSN:8.2K OHM,5%,0.25W	01121	CB8225
R639	316-0470-02			RES.,FXD,CMPSN:47 OHM,10%,0.25W	01121	CB4701
R640	321-0280-00			RES.,FXD,FILM:8.06K OHM,1%,0.125W	91637	MFF1816G80600F
R641	321-0280-00			RES.,FXD,FILM:8.06K OHM,1%,0.125W	91637	MFF1816G80600F
R642	321-0068-00			RES.,FXD,FILM:49.9 OHM,1%,0.125W	91637	MFF1816G49R90F
R643	323-0145-00			RES.,FXD,FILM:316 OHM,1%,0.50W	91637	MFF1226G316R0F
R645	317-0121-00			RES.,FXD,CMPSN:120 OHM,5%,0.125W	01121	BB1215
R646	323-0145-00			RES.,FXD,FILM:316 OHM,1%,0.50W	91637	MFF1226G316R0F
R647	321-0068-00			RES.,FXD,FILM:49.9 OHM,1%,0.125W	91637	MFF1816G49R90F
R649	316-0104-00			RES.,FXD,CMPSN:100K OHM,10%,0.25W	01121	CB1041
R650	315-0391-00			RES.,FXD,CMPSN:390 OHM,5%,0.25W	01121	CB3915
R652	321-0068-03			RES.,FXD,FILM:49.9 OHM,0.25%,0.125W	91637	MFF1816D49R90C
R654	321-0068-03			RES.,FXD,FILM:49.9 OHM,0.25%,0.125W	91637	MFF1816D49R90C
R655	321-0068-03			RES.,FXD,FILM:49.9 OHM,0.25%,0.125W	91637	MFF1816D49R90C
R656	321-0068-03			RES.,FXD,FILM:49.9 OHM,0.25%,0.125W	91637	MFF1816D49R90C
R657	321-0025-00			RES.,FXD,FILM:17.8 OHM,1%,0.125W	91637	MFF1816G17R80F
R658	323-0055-00			RES.,FXD,FILM:36.5 OHM,1%,0.50W	91637	MFF1226G38R00F
R663	322-0097-00			RES.,FXD,FILM:100 OHM,1%,0.25W	75042	CEBT0-1000F
R664	322-0097-00			RES.,FXD,FILM:100 OHM,1%,0.25W	75042	CEBT0-1000F
R666	322-0097-00			RES.,FXD,FILM:100 OHM,1%,0.25W	75042	CEBT0-1000F
R667	322-0097-00			RES.,FXD,FILM:100 OHM,1%,0.25W	75042	CEBT0-1000F
R672	321-0105-00			RES.,FXD,FILM:121 OHM,1%,0.125W	91637	MFF1816G121R0F
R673	321-0189-00			RES.,FXD,FILM:909 OHM,1%,0.125W	91637	MFF1816G909R0F
R681	321-0336-00			RES.,FXD,FILM:30.9 OHM,1%,0.125W	91637	MFF1816G30901F
R682	321-0228-00			RES.,FXD,FILM:2.32K OHM,1%,0.125W	91637	MFF1816G23200F
R683	315-0152-00			RES.,FXD,CMPSN:1.5K OHM,5%,0.25W	01121	CB1525
R684	315-0330-00			RES.,FXD,CMPSN:33 OHM,5%,0.25W	01121	CB3305
R685	315-0202-00			RES.,FXD,CMPSN:2K OHM,5%,0.25W	01121	CB2025
R686	315-0102-00			RES.,FXD,CMPSN:1K OHM,5%,0.25W	01121	CB1025
R687	315-0511-00			RES.,FXD,CMPSN:510 OHM,5%,0.25W	01121	CB5115
R691	307-0292-00	B010100	B142299	RES.,FXD,FILM:182.5 OHM	80009	307-0292-00

http://manoman.sqhill.com

Ckt No.	Tektronix Part No.	Serial/Model No. Eff	Dscont	Name & Description	Mfr Code	Mfr Part Number
R691	307-0292-09	B142300		RES.,FXD,FILM:181 OHM,(NOM VALUE),SEL	80009	307-0292-09
R696	307-0113-00			RES.,FXD,CMPSN:5.1 OHM,5%,0.25W	01121	CB51G5
R701	315-0240-00			RES.,FXD,CMPSN:24 OHM,5%,0.25W	01121	CB2405
R702	317-0471-00			RES.,FXD,CMPSN:470 OHM,5%,0.125W	01121	BB4715
R703	322-0621-00			RES.,FXD,FILM:900K OHM,1%,0.25W	75042	CEBT0-9003F
R704	321-0389-00			RES.,FXD,FILM:110K OHM,1%,0.125W	91637	MFF1816G11002F
R705	301-0104-00			RES.,FXD,CMPSN:100K OHM,5%,0.5W	01121	EB1045
R706	315-0750-00			RES.,FXD,CMPSN:75 OHM,5%,0.25W	01121	CB7505
R707	317-0510-00	XB020000		RES.,FXD,CMPSN:51 OHM,5%,0.125W	01121	BB5105
R708	301-0104-00			RES.,FXD,CMPSN:100K OHM,5%,0.5W	01121	EB1045
R709	322-0621-00			RES.,FXD,FILM:900K OHM,1%,0.25W	75042	CEBT0-9003F
R711	317-0101-00			RES.,FXD,CMPSN:100 OHM,5%,0.125W	01121	BB1015
R714	315-0621-00			RES.,FXD,CMPSN:620 OHM,5%,0.25W	01121	CB6215
R717	315-0471-00			RES.,FXD,CMPSN:470 OHM,5%,0.25W	01121	CB4715
R718[1]	315-0153-00			RES.,FXD,CMPSN:15K OHM,5%,0.25W	01121	CB1535
R719	321-0158-00			RES.,FXD,FILM:432 OHM,1%,0.125W	91637	MFF1816G432R0F
R720[2]	311-1192-00			RES.,VAR,NONWIR:10K OHM,20%,1W	71590	BA-232-001
R721	315-0102-00			RES.,FXD,CMPSN:1K OHM,5%,0.25W	01121	CB1025
R723	315-0390-00			RES.,FXD,CMPSN:39 OHM,5%,0.25W	01121	CB3905
R724	315-0222-00			RES.,FXD,CMPSN:2.2K OHM,5%,0.25W	01121	CB2225
R725	311-0644-00			RES.,VAR,NONWIR:20K OHM,10%,0.50W	73138	MODEL 82P
R727	317-0330-00			RES.,FXD,CMPSN:33 OHM,5%,0.125W	01121	BB3305
R728	315-0471-00			RES.,FXD,CMPSN:470 OHM,5%,0.25W	01121	CB4715
R729	317-0101-00			RES.,FXD,CMPSN:100 OHM,5%,0.125W	01121	BB1015
R731[1]	321-0082-00			RES.,FXD,FILM:69.8 OHM,1%,0.125W	91637	MFF1816G69R80F
R732	321-0147-00			RES.,FXD,FILM:332 OHM,1%,0.125W	91637	MFF1816G332R0F
R733	317-0240-00			RES.,FXD,CMPSN:24 OHM,5%,0.125W	01121	BB2405
R734	317-0390-00	XB050000		RES.,FXD,CMPSN:39 OHM,5%,0.125W	01121	BB3905
R735	321-0147-00			RES.,FXD,FILM:332 OHM,1%,0.125W	91637	MFF1816G332R0F
R736[1]	321-0082-00			RES.,FXD,FILM:69.8 OHM,1%,0.125W	91637	MFF1816G69R80F
R738	315-0431-00			RES.,FXD,CMPSN:430 OHM,5%,0.25W	01121	CB4315
R739	315-0561-00			RES.,FXD,CMPSN:560 OHM,5%,0.25W	01121	CB5615
R741	315-0822-00			RES.,FXD,CMPSN:8.2K OHM,5%,0.25W	01121	CB8225
R742	315-0332-00			RES.,FXD,CMPSN:3.3K OHM,5%,0.25W	01121	CB3325
R743	315-0201-00			RES.,FXD,CMPSN:200 OHM,5%,0.25W	01121	CB2015
R744	317-0300-00			RES.,FXD,CMPSN:30 OHM,5%,0.125W	01121	BB3005
R745[1]	321-0079-00			RES.,FXD,FILM:64.9 OHM,1%,0.125W	91637	MFF1816G64R90F
R746[1]	321-0082-00			RES.,FXD,FILM:69.8 OHM,1%,0.125W	91637	MFF1816G69R80F
R747	321-0177-00			RES.,FXD,FILM:681 OHM,1%,0.125W	91637	MFF1816G681R0F
R748	321-0177-00			RES.,FXD,FILM:681 OHM,1%,0.125W	91637	MFF1816G681R0F
R749[1]	321-0082-00			RES.,FXD,FILM:69.8 OHM,1%,0.125W	91637	MFF1816G69R80F
R750	315-0201-00			RES.,FXD,CMPSN:200 OHM,5%,0.25W	01121	CB2015
R751	317-0330-00			RES.,FXD,CMPSN:33 OHM,5%,0.125W	01121	BB3305
R752	317-0330-00			RES.,FXD,CMPSN:33 OHM,5%,0.125W	01121	BB3305
R753	317-0392-00			RES.,FXD,CMPSN:3.9K OHM,5%,0.125W	01121	BB3925
R754	317-0300-00			RES.,FXD,CMPSN:30 OHM,5%,0.125W	01121	BB3005
R755	311-0643-00			RES.,VAR,NONWIR:50 OHM,10%,0.50W	80740	62-52-3
R756	317-0161-00			RES.,FXD,CMPSN:160 OHM,5%,0.125W	01121	BB1615
R757	317-0161-00			RES.,FXD,CMPSN:160 OHM,5%,0.125W	01121	BB1615
R760	317-0101-00			RES.,FXD,CMPSN:100 OHM,5%,0.125W	01121	BB1015
R761	315-0101-00			RES.,FXD,CMPSN:100 OHM,5%,0.25W	01121	CB1015
R762	317-0910-00			RES.,FXD,CMPSN:91 OHM,5%,0.125W	01121	BB9105
R764	317-0101-00			RES.,FXD,CMPSN:100 OHM,5%,0.125W	01121	BB1015

[1] 485 only
[2] Furnished as a unit with S720.

http://manoman.sqhill.com

Ckt No.	Tektronix Part No.	Serial/Model No. Eff	Dscont	Name & Description	Mfr Code	Mfr Part Number
R765	311-0607-00			RES.,VAR,NONWIR:10K OHM,10%,0.50W	73138	82P-59-4-103K
R766	321-0233-00	B010100	B049999	RES.,FXD,FILM:2.61K OHM,1%,0.125W	91637	MFF1816G26100F
R766	321-0229-00	B050000		RES.,FXD,FILM:2.37K OHM,1%,0.125W	91637	MFF1816G23700F
R767	315-0201-00			RES.,FXD,CMPSN:200 OHM,5%,0.25W	01121	CB2015
R768	321-0212-00			RES.,FXD,FILM:1.58K OHM,1%,0.125W	91637	MFF1816G15800F
R769	315-0102-00			RES.,FXD,CMPSN:1K OHM,5%,0.25W	01121	CB1025
R771	315-0182-00			RES.,FXD,CMPSN:1.8K OHM,5%,0.25W	01121	CB1825
R772	315-0152-00			RES.,FXD,CMPSN:1.5K OHM,5%,0.25W	01121	CB1525
R773	317-0201-00			RES.,FXD,CMPSN:200 OHM,5%,0.125W	01121	BB2015
R774	317-0511-00			RES.,FXD,CMPSN:510 OHM,5%,0.125W	01121	BB5115
R775	311-0607-00	B010100	B129999	RES.,VAR,NONWIR:10K OHM,10%,0.50W	73138	82P-59-4-103K
R775	311-0633-00	B130000		RES.,VAR,NONWIR:5K OHM,10%,0.50W	73138	82-30-0
R776	321-0248-00	B010100	B129999	RES.,FXD,FILM:3.74K OHM,1%,0.125W	91637	MFF1816G37400F
R776	321-0232-00	B130000		RES.,FXD,FILM:2.55K OHM,1%,0.125W	91637	MFF1816G25500F
R778	321-0232-00	B010100	B129999	RES.,FXD,FILM:2.55K OHM,1%,0.125W	91637	MFF1816G25500F
R778	321-0239-00	B130000		RES.,FXD,FILM:3.01K OHM,1%,0.125W	91637	MFF1816G30100F
R781	315-0471-00			RES.,FXD,CMPSN:470 OHM,5%,0.25W	01121	CB4715
R782	315-0390-00			RES.,FXD,CMPSN:39 OHM,5%,0.25W	01121	CB3905
R783	315-0390-00			RES.,FXD,CMPSN:39 OHM,5%,0.25W	01121	CB3905
R784	315-0103-00			RES.,FXD,CMPSN:10K OHM,5%,0.25W	01121	CB1035
R787	315-0184-00	B010100	B149999	RES.,FXD,CMPSN:180K OHM,5%,0.25W	01121	CB1845
R787	315-0224-00	B150000		RES.,FXD,CMPSN:220K OHM,5%,0.25W	01121	CB2245
R791	315-0302-00			RES.,FXD,CMPSN:3K OHM,5%,0.25W	01121	CB3025
R792	315-0201-00			RES.,FXD,CMPSN:200 OHM,5%,0.25W	01121	CB2015
R793	321-0159-00			RES.,FXD,FILM:442 OHM,1%,0.125W	91637	MFF1816G442R0F
R796	321-0157-00			RES.,FXD,FILM:422 OHM,1%,0.125W	91637	MFF1816G422R0F
R799	315-0332-00			RES.,FXD,CMPSN:3.3K OHM,5%,0.25W	01121	CB3325
R801	315-0101-00			RES.,FXD,CMPSN:100 OHM,5%,0.25W	01121	CB1015
R802	321-0225-00			RES.,FXD,FILM:2.15K OHM,1%,0.125W	91637	MFF1816G21500F
R803	315-0101-00			RES.,FXD,CMPSN:100 OHM,5%,0.25W	01121	CB1015
R811	315-0100-00			RES.,FXD,CMPSN:10 OHM,5%,0.25W	01121	CB1005
R812	315-0751-00			RES.,FXD,CMPSN:750 OHM,5%,0.25W	01121	CB7515
R813	315-0391-00	B010100	B010209	RES.,FXD,CMPSN:390 OHM,5%,0.25W	01121	CB3915
R813	315-0331-00	B010210		RES.,FXD,CMPSN:330 OHM,5%,0.25W	01121	CB3315
R814	315-0911-00			RES.,FXD,CMPSN:330 OHM,5%,0.25W	01121	CB9115
R821	315-0202-00			RES.,FXD,CMPSN:2K OHM,5%,0.25W	01121	CB2025
R822	315-0511-00			RES.,FXD,CMPSN:510 OHM,5%,0.25W	01121	CB5115
R823	315-0132-00			RES.,FXD,CMPSN:1.3K OHM,5%,0.25W	01121	CB1325
R826	315-0102-00			RES.,FXD,CMPSN:1K OHM,5%,0.25W	01121	CB1025
R827	315-0153-00			RES.,FXD,CMPSN:15K OHM,5%,0.25W	01121	CB1535
R828	315-0241-00			RES.,FXD,CMPSN:240 OHM,5%,0.25W	01121	CB2415
R830[1]	311-0643-00			RES.,VAR,NONWIR:50 OHM,10%,0.50W	80740	62-52-3
R831[1]	321-0155-00			RES.,FXD,FILM:402 OHM,1%,0.125W	91637	MFF1816G402R0F
R832[1]	321-0155-00			RES.,FXD,FILM:402 OHM,1%,0.125W	91637	MFF1816G402R0F
R833A[1]	321-0158-00			RES.,FXD,FILM:432 OHM,1%,0.125W	91637	MFF1816G432R0F
R833B[2]	321-0158-00			RES.,FXD,FILM:432 OHM,1%,0.125W	91637	MFF1816G432R0F
R834A[1]	317-0301-00			RES.,FXD,CMPSN:300 OHM,5%,0.125W	01121	BB3015
R834B[2]	317-0301-00			RES.,FXD,CMPSN:300 OHM,5%,0.125W	01121	BB3015
R835[1]	315-0911-00			RES.,FXD,CMPSN:910 OHM,5%,0.25W	01121	CB9115
R836[1]	315-0911-00			RES.,FXD,CMPSN:330 OHM,5%,0.25W	01121	CB9115
R840[1]	315-0241-00			RES.,FXD,CMPSN:240 OHM,5%,0.25W	01121	CB2415
R841[1]	321-0143-00			RES.,FXD,FILM:301 OHM,1%,0.125W	91637	MFF1816G301R0F
R842[1]	321-0143-00			RES.,FXD,FILM:301 OHM,1%,0.125W	91637	MFF1816G301R0F

[1] 485 only
[2] 485-1, 485-2 only

http://manoman.sqhill.com

Ckt No.	Tektronix Part No.	Serial/Model No. Eff	Dscont	Name & Description	Mfr Code	Mfr Part Number
R843	315-0621-00			RES.,FXD,CMPSN:620 OHM,5%,0.25W	01121	CB6215
R844	315-0681-00			RES.,FXD,CMPSN:680 OHM,5%,0.25W	01121	CB6815
R845	315-0241-00			RES.,FXD,CMPSN:240 OHM,5%,0.25W	01121	CB2415
R851	321-0291-00			RES.,FXD,FILM:10.5K OHM,1%,0.125W	91637	MFF1816G10501F
R852	315-0181-00			RES.,FXD,CMPSN:180 OHM,5%,0.25W	01121	CB1815
R853	321-0183-00			RES.,FXD,FILM:787 OHM,1%,0.125W	91637	MFF1816G787R0F
R854	315-0124-00			RES.,FXD,CMPSN:120K OHM,5%,0.25W	01121	CB1245
R856	315-0562-00			RES.,FXD,CMPSN:5.6K OHM,5%,0.25W	01121	CB5625
R857	315-0681-00			RES.,FXD,CMPSN:680 OHM,5%,0.25W	01121	CB6815
R861	315-0101-00			RES.,FXD,CMPSN:100 OHM,5%,0.25W	01121	CB1015
R862	315-0182-00			RES.,FXD,CMPSN:1.8K OHM,5%,0.25W	01121	CB1825
R863	311-1224-00			RES.,VAR,NONWIR:500 OHM,20%,0.50W	32997	3386F-T04-501
R865	321-0149-00			RES.,FXD,FILM:348 OHM,1%,0.125W	91637	MFF1816G348R0F
R866	315-0102-00			RES.,FXD,CMPSN:1K OHM,5%,0.25W	01121	CB1025
R867	321-0201-00			RES.,FXD,FILM:1.21K OHM,1%,0.125W	91637	MFF1816G12100F
R868	321-0258-00			RES.,FXD,FILM:4.75K OHM,1%,0.125W	91637	MFF1816G47500F
R869	321-0379-00			RES.,FXD,FILM:86.6K OHM,1%,0.125W	91637	MFF1816G86601F
R873	323-0318-07			RES.,FXD,FILM:20K OHM,0.1%,0.50W	91637	MFF1226G20001B
R874	315-0101-00			RES.,FXD,CMPSN:100 OHM,5%,0.25W	01121	CB1015
R876	315-0221-00			RES.,FXD,CMPSN:220 OHM,5%,0.25W	01121	CB2215
R877	317-0330-00			RES.,FXD,CMPSN:33 OHM,5%,0.125W	01121	BB3305
R878	317-0330-00			RES.,FXD,CMPSN:33 OHM,5%,0.125W	01121	BB3305
R891	321-0064-00			RES.,FXD,FILM:45.3 OHM,1%,0.125W	91637	MFF1816G45R30F
R892	315-0202-00			RES.,FXD,CMPSN:2K OHM,5%,0.25W	01121	CB2025
R894	321-0258-00			RES.,FXD,FILM:4.75K OHM,1%,0.125W	91637	MFF1816G47500F
R896	321-0152-00			RES.,FXD,FILM:374 OHM,1%,0.125W	91637	MFF1816G374R0F
R898[1]	311-1216-00			RES.,VAR,NONWIR:200K OHM,20%,0.50W	01121	11M714
R900	315-0471-00			RES.,FXD,CMPSN:470 OHM,5%,0.25W	01121	CB4715
R901	315-0151-00			RES.,FXD,CMPSN:150 OHM,5%,0.25W	01121	CB1515
R902	315-0151-00			RES.,FXD,CMPSN:150 OHM,5%,0.25W	01121	CB1515
R903	315-0101-00			RES.,FXD,CMPSN:100 OHM,5%,0.25W	01121	CB1015
R904	321-0205-00			RES.,FXD,FILM:1.33K OHM,1%,0.125W	91637	MFF1816G13300F
R905	315-0101-00			RES.,FXD,CMPSN:100 OHM,5%,0.25W	01121	CB1015
R906	315-0822-00			RES.,FXD,CMPSN:8.2K OHM,5%,0.25W	01121	CB8225
R908	315-0683-00			RES.,FXD,CMPSN:68K OHM,5%,0.25W	01121	CB6835
R909	315-0222-00			RES.,FXD,CMPSN:2.2K OHM,5%,0.25W	01121	CB2225
R910	315-0243-00			RES.,FXD,CMPSN:24K OHM,5%,0.25W	01121	CB2435
R911	315-0272-00			RES.,FXD,CMPSN:2.7K OHM,5%,0.25W	01121	CB2725
R912	315-0102-00			RES.,FXD,CMPSN:1K OHM,5%,0.25W	01121	CB1025
R913	315-0103-00			RES.,FXD,CMPSN:10K OHM,5%,0.25W	01121	CB1035
R914	315-0302-00			RES.,FXD,CMPSN:3K OHM,5%,0.25W	01121	CB3025
R915	315-0103-00			RES.,FXD,CMPSN:10K OHM,5%,0.25W	01121	CB1035
R916	321-0309-00			RES.,FXD,FILM:16.2K OHM,1%,0.125W	91637	MFF1816G16201F
R917	321-0210-00			RES.,FXD,FILM:1.5K OHM,1%,0.125W	91637	MFF1816G15000F
R918	311-1268-00			RES.,VAR,NONWIR:10K OHM,10%,0.50W	32997	3329P-L58-103
R919	321-0382-00			RES.,FXD,FILM:93.1K OHM,1%,0.125W	91637	MFF1816G93101F
R920	311-1458-00			RES.,VAR,WW:50K OHM,5%	73138	7266-322-0
R925	311-1270-00			RES.,VAR,NONWIR:25K OHM,10%,0.50W	80294	3326P-L58-253
R926	321-0335-00			RES.,FXD,FILM:30.1K OHM,1%,0.125W	91637	MFF1816G30101F
R927	321-0308-00			RES.,FXD,FILM:15.8K OHM,1%,0.125W	91637	MFF1816G15801F
R929	321-0241-00			RES.,FXD,FILM:3.16K OHM,1%,0.125W	91637	MFF1816G31600F
R931	321-0304-00			RES.,FXD,FILM:14.3K OHM,1%,0.125W	91637	MFF1816G14301F
R932	321-0256-00			RES.,FXD,FILM:4.53K OHM,1%,0.125W	91637	MFF1816G45300F

[1]Furnished as a unit with S898.

http://manoman.sqhill.com

Ckt No.	Tektronix Part No.	Serial/Model No. Eff	Dscont	Name & Description	Mfr Code	Mfr Part Number
R933	315-0470-00			RES.,FXD,CMPSN:47 OHM,5%,0.25W	01121	CB4705
R934	321-0262-00			RES.,FXD,FILM:5.23K OHM,1%,0.125W	91637	MFF1816G52300F
R935	315-0222-00			RES.,FXD,CMPSN:2.2K OHM,5%,0.25W	01121	CB2225
R936	315-0562-00			RES.,FXD,CMPSN:5.6K OHM,5%,0.25W	01121	CB5625
R937	321-0254-00			RES.,FXD,FILM:4.32K OHM,1%,0.125W	91637	MFF1816G43200F
R938	315-0470-00			RES.,FXD,CMPSN:47 OHM,5%,0.25W	01121	CB4705
R939	321-0307-00			RES.,FXD,FILM:15.4K OHM,1%,0.125W	91637	MFF1816G15401F
R941	321-0288-00			RES.,FXD,FILM:9.76K OHM,1%,0.125W	91637	MFF1816G97600F
R942	321-0323-00			RES.,FXD,FILM:22.6K OHM,1%,0.125W	91637	MFF1816G22601F
R944	315-0223-00			RES.,FXD,CMPSN:22K OHM,5%,0.25W	01121	CB2235
R945	315-0470-00			RES.,FXD,CMPSN:47 OHM,5%,0.25W	01121	CB4705
R946	307-0106-00			RES.,FXD,CMPSN:4.7 OHM,5%,0.25W	01121	CB47G5
R947	315-0472-00			RES.,FXD,CMPSN:4.7K OHM,5%,0.25W	01121	CB4725
R948	321-0289-00			RES.,FXD,FILM:10K OHM,1%,0.125W	91637	MFF1816G10001F
R949	323-0192-00			RES.,FXD,FILM:976 OHM,1%,0.50W	75042	CECT0-9760F
R961	321-0385-00			RES.,FXD,FILM:100K OHM,1%,0.125W	91637	MFF1816G10002F
R962	321-0680-00			RES.,FXD,FILM:35.3K OHM,0.5%,0.125W	91637	MFF1816D35301D
R965	321-0091-00			RES.,FXD,FILM:86.6 OHM,1%,0.125W	91637	MFF1816G86R60F
R967	315-0100-00	XB130000		RES.,FXD,CMPSN:10 OHM,5%,0.25W	01121	CB1005
R1001	315-0240-00			RES.,FXD,CMPSN:24 OHM,5%,0.25W	01121	CB2405
R1002	317-0471-00			RES.,FXD,CMPSN:470 OHM,5%,0.125W	01121	BB4715
R1003	322-0621-00			RES.,FXD,FILM:900K OHM,1%,0.25W	75042	CEBT0-9003F
R1004	321-0389-00			RES.,FXD,FILM:110K OHM,1%,0.125W	91637	MFF1816G11002F
R1005	301-0104-00			RES.,FXD,CMPSN:100K OHM,5%,0.5W	01121	EB1045
R1006	315-0750-00			RES.,FXD,CMPSN:75 OHM,5%,0.25W	01121	CB7505
R1007	317-0510-00	XB020000		RES.,FXD,CMPSN:51 OHM,5%,0.125W	01121	BB5105
R1008	301-0104-00			RES.,FXD,CMPSN:100K OHM,5%,0.5W	01121	EB1045
R1009	322-0621-00			RES.,FXD,FILM:900K OHM,1%,0.25W	75042	CEBT0-9003F
R1011	315-0131-00			RES.,FXD,CMPSN:130 OHM,5%,0.25W	01121	CB1315
R1012	315-0621-00			RES.,FXD,CMPSN:620 OHM,5%,0.25W	01121	CB6215
R1013	315-0621-00			RES.,FXD,CMPSN:620 OHM,5%,0.25W	01121	CB6215
R1015	315-0471-00			RES.,FXD,CMPSN:470 OHM,5%,0.25W	01121	CB4715
R1016	317-0330-00			RES.,FXD,CMPSN:33 OHM,5%,0.125W	01121	BB3305
R1017	321-0158-00			RES.,FXD,FILM:432 OHM,1%,0.125W	91637	MFF1816G432R0F
R1018	321-0158-00			RES.,FXD,FILM:432 OHM,1%,0.125W	91637	MFF1816G432R0F
R1019	317-0101-00			RES.,FXD,CMPSN:100 OHM,5%,0.125W	01121	BB1015
R1020[1]	311-1192-00			RES.,VAR,NONWIR:10K OHM,20%,1W	71590	BA-232-001
R1021	317-0150-00			RES.,FXD,CMPSN:15 OHM,5%,0.125W	01121	BB1505
R1022	315-0102-00			RES.,FXD,CMPSN:1K OHM,5%,0.25W	01121	CB1025
R1023	315-0390-00			RES.,FXD,CMPSN:39 OHM,5%,0.25W	01121	CB3905
R1024	315-0332-00			RES.,FXD,CMPSN:3.3K OHM,5%,0.25W	01121	CB3325
R1025	311-1230-00			RES.,VAR,NONWIR:20K OHM,20%,0.50W	32997	3386F-T04-203
R1026	317-0330-00			RES.,FXD,CMPSN:33 OHM,5%,0.125W	01121	BB3305
R1027	315-0431-00			RES.,FXD,CMPSN:430 OHM,5%,0.25W	01121	CB4315
R1028	315-0561-00			RES.,FXD,CMPSN:560 OHM,5%,0.25W	01121	CB5615
R1029	315-0471-00			RES.,FXD,CMPSN:470 OHM,5%,0.25W	01121	CB4715
R1030	315-0390-00			RES.,FXD,CMPSN:39 OHM,5%,0.25W	01121	CB3905
R1031	321-0082-00			RES.,FXD,FILM:69.8 OHM,1%,0.125W	91637	MFF1816G69R80F
R1032	321-0147-00			RES.,FXD,FILM:332 OHM,1%,0.125W	91637	MFF1816G332R0F
R1033	321-0147-00			RES.,FXD,FILM:332 OHM,1%,0.125W	91637	MFF1816G332R0F
R1034	321-0082-00			RES.,FXD,FILM:69.8 OHM,1%,0.125W	91637	MFF1816G69R80F
R1035	317-0390-00	XB050000		RES.,FXD,CMPSN:39 OHM,5%,0.125W	01121	BB3905
R1037	315-0681-00			RES.,FXD,CMPSN:680 OHM,5%,0.25W	01121	CB6815

[1]Furnished as a unit with S1020.

http://manoman.sqhill.com

Ckt No.	Tektronix Part No.	Serial/Model No. Eff	Dscont	Name & Description	Mfr Code	Mfr Part Number
R1038	315-0301-00			RES.,FXD,CMPSN:300 OHM,5%,0.25W	01121	CB3015
R1039	315-0241-00			RES.,FXD,CMPSN:240 OHM,5%,0.25W	01121	CB2415
R1040	321-0079-00			RES.,FXD,FILM:64.9 OHM,1%,0.125W	91637	MFF1816G64R90F
R1041	321-0082-00			RES.,FXD,FILM:69.8 OHM,1%,0.125W	91637	MFF1816G69R80F
R1042	321-0177-00			RES.,FXD,FILM:681 OHM,1%,0.125W	91637	MFF1816G681R0F
R1043	321-0177-00			RES.,FXD,FILM:681 OHM,1%,0.125W	91637	MFF1816G681R0F
R1044	321-0082-00			RES.,FXD,FILM:69.8 OHM,1%,0.125W	91637	MFF1816G69R80F
R1045	315-0560-00			RES.,FXD,CMPSN:56 OHM,5%,0.25W	01121	CB5605
R1047	315-0822-00			RES.,FXD,CMPSN:8.2K OHM,5%,0.25W	01121	CB8225
R1048	315-0201-00			RES.,FXD,CMPSN:200 OHM,5%,0.25W	01121	CB2015
R1049	315-0332-00			RES.,FXD,CMPSN:3.3K OHM,5%,0.25W	01121	CB3325
R1050	315-0201-00			RES.,FXD,CMPSN:200 OHM,5%,0.25W	01121	CB2015
R1051	317-0330-00			RES.,FXD,CMPSN:33 OHM,5%,0.125W	01121	BB3305
R1052	317-0330-00			RES.,FXD,CMPSN:33 OHM,5%,0.125W	01121	BB3305
R1053	315-0392-00			RES.,FXD,CMPSN:3.9K OHM,5%,0.25W	01121	CB3925
R1054	317-0300-00			RES.,FXD,CMPSN:30 OHM,5%,0.125W	01121	BB3005
R1055	311-0643-00			RES.,VAR,NONWIR:50 OHM,10%,0.50W	80740	62-52-3
R1056	317-0161-00			RES.,FXD,CMPSN:160 OHM,5%,0.125W	01121	BB1615
R1057	315-0161-00			RES.,FXD,CMPSN:160 OHM,5%,0.25W	01121	CB1615
R1061	317-0101-00			RES.,FXD,CMPSN:100 OHM,5%,0.125W	01121	BB1015
R1062	317-0101-00			RES.,FXD,CMPSN:100 OHM,5%,0.125W	01121	BB1015
R1063	317-0101-00			RES.,FXD,CMPSN:100 OHM,5%,0.125W	01121	BB1015
R1064	317-0910-00			RES.,FXD,CMPSN:91 OHM,5%,0.125W	01121	BB9105
R1065	311-0607-00			RES.,VAR,NONWIR:10K OHM,10%,0.50W	73138	82P-59-4-103K
R1066	321-0239-00			RES.,FXD,FILM:3.01K OHM,1%,0.125W	91637	MFF1816G30100F
R1067	315-0103-00			RES.,FXD,CMPSN:10K OHM,5%,0.25W	01121	CB1035
R1068	321-0222-00			RES.,FXD,FILM:2K OHM,1%,0.125W	91637	MFF1816G20000F
R1069	317-0511-00			RES.,FXD,CMPSN:510 OHM,5%,0.125W	01121	BB5115
R1070	315-0103-00			RES.,FXD,CMPSN:10K OHM,5%,0.25W	01121	CB1035
R1071	315-0101-00			RES.,FXD,CMPSN:100 OHM,5%,0.25W	01121	CB1015
R1072	315-0152-00			RES.,FXD,CMPSN:1.5K OHM,5%,0.25W	01121	CB1525
R1073	321-0239-00			RES.,FXD,FILM:3.01K OHM,1%,0.125W	91637	MFF1816G30100F
R1074	321-0239-00	B010100	B049999	RES.,FXD,FILM:3.01K OHM,1%,0.125W	91637	MFF1816G30100F
R1074	321-0235-00	B050000		RES.,FXD,FILM:2.74K OHM,1%,0.125W	91637	MFF1816G27400F
R1075	311-0607-00			RES.,VAR,NONWIR:10K OHM,10%,0.50W	73138	82P-59-4-103K
R1076	321-0235-00			RES.,FXD,FILM:2.74K OHM,1%,0.125W	91637	MFF1816G27400F
R1077	317-0201-00			RES.,FXD,CMPSN:200 OHM,5%,0.125W	01121	BB2015
R1078	321-0256-00			RES.,FXD,FILM:4.53K OHM,1%,0.125W	91637	MFF1816G45300F
R1079	315-0102-00			RES.,FXD,CMPSN:1K OHM,5%,0.25W	01121	CB1025
R1081	315-0101-00			RES.,FXD,CMPSN:100 OHM,5%,0.25W	01121	CB1015
R1082	321-0185-00			RES.,FXD,FILM:825 OHM,1%,0.125W	91637	MFF1816G825R0F
R1083	315-0101-00			RES.,FXD,CMPSN:100 OHM,5%,0.25W	01121	CB1015
R1084	315-0470-00			RES.,FXD,CMPSN:47 OHM,5%,0.25W	01121	CB4705
R1085	317-0512-00	XB060000		RES.,FXD,CMPSN:5.1K OHM,5%,0.125	01121	BB5125
R1086	315-0101-00			RES.,FXD,CMPSN:100 OHM,5%,0.25W	01121	CB1015
R1087	321-0240-00			RES.,FXD,FILM:3.09K OHM,1%,0.125W	91637	MFF1816G30900F
R1089	315-0101-00			RES.,FXD,CMPSN:100 OHM,5%,0.25W	01121	CB1015
R1090	315-0101-00			RES.,FXD,CMPSN:100 OHM,5%,0.25W	01121	CB1015
R1091	315-0241-00			RES.,FXD,CMPSN:240 OHM,5%,0.25W	01121	CB2415
R1092	315-0271-00			RES.,FXD,CMPSN:270 OHM,5%,0.25W	01121	CB2715
R1093	315-0101-00			RES.,FXD,CMPSN:100 OHM,5%,0.25W	01121	CB1015
R1094	315-0101-00			RES.,FXD,CMPSN:100 OHM,5%,0.25W	01121	CB1015
R1096	315-0100-00			RES.,FXD,CMPSN:10 OHM,5%,0.25W	01121	CB1005

http://manoman.sqhill.com

Ckt No.	Tektronix Part No.	Serial/Model No. Eff	Dscont	Name & Description	Mfr Code	Mfr Part Number
R1097	315-0101-00			RES.,FXD,CMPSN:100 OHM,5%,0.25W	01121	CB1015
R1098	315-0201-00			RES.,FXD,CMPSN:200 OHM,5%,0.25W	01121	CB2015
R1101	315-0473-00			RES.,FXD,CMPSN:47K OHM,5%,0.25W	01121	CB4735
R1102	315-0473-00			RES.,FXD,CMPSN:47K OHM,5%,0.25W	01121	CB4735
R1103	321-0177-00			RES.,FXD,FILM:681 OHM,1%,0.125W	91637	MFF1816G681R0F
R1104	321-0326-00			RES.,FXD,FILM:24.3K OHM,1%,0.125W	91637	MFF1816G24301F
R1105	317-0201-00			RES.,FXD,CMPSN:200 OHM,5%,0.125W	01121	BB2015
R1106	315-0101-00			RES.,FXD,CMPSN:100 OHM,5%,0.25W	01121	CB1015
R1107	321-0159-00			RES.,FXD,FILM:442 OHM,1%,0.125W	91637	MFF1816G442R0F
R1108	315-0102-00			RES.,FXD,CMPSN:1K OHM,5%,0.25W	01121	CB1025
R1111	315-0242-00			RES.,FXD,CMPSN:2.4K OHM,5%,0.25W	01121	CB2425
R1112	315-0151-00			RES.,FXD,CMPSN:150 OHM,5%,0.25W	01121	CB1515
R1114	321-0155-00			RES.,FXD,FILM:402 OHM,1%,0.125W	91637	MFF1816G402R0F
R1115	315-0100-00			RES.,FXD,CMPSN:10 OHM,5%,0.25W	01121	CB1005
R1116	315-0391-00	B010100	B010209	RES.,FXD,CMPSN:390 OHM,5%,0.25W	01121	CB3915
R1116	315-0331-00	B010210		RES.,FXD,CMPSN:330 OHM,5%,0.25W	01121	CB3315
R1117	315-0242-00			RES.,FXD,CMPSN:2.4K OHM,5%,0.25W	01121	CB2425
R1119	315-0152-00			RES.,FXD,CMPSN:1.5K OHM,5%,0.25W	01121	CB1525
R1121	315-0751-00			RES.,FXD,CMPSN:750 OHM,5%,0.25W	01121	CB7515
R1123	321-0225-00			RES.,FXD,FILM:2.15K OHM,1%,0.125W	91637	MFF1816G21500F
R1126	315-0101-00			RES.,FXD,CMPSN:100 OHM,5%,0.25W	01121	CB1015
R1127	315-0242-00			RES.,FXD,CMPSN:2.4K OHM,5%,0.25W	01121	CB2425
R1129	315-0101-00			RES.,FXD,CMPSN:100 OHM,5%,0.25W	01121	CB1015
R1150	311-1223-00			RES.,VAR,NONWIR:250 OHM,10%,0.50W	32997	3386F-T04-251
R1151	323-0164-00	B010100	B039999	RES.,FXD,FILM:499 OHM,1%,0.50W	75042	CECT0-4990F
R1151	323-0163-00	B040000	B143554	RES.,FXD,FILM:487 OHM,1%,0.50W	75042	CECT0-4870F
R1151	323-0166-00	B143555		RES.,FXD,FILM:523 OHM,1%,0.50W	75042	CECT0-5230F
R1152	323-0172-00	B010100	B039999	RES.,FXD,FILM:604 OHM,1%,0.50W	91637	MFF1226G604R0F
R1152	323-0183-00	B040000	B143554	RES.,FXD,FILM:787 OHM,1%,0.50W	75042	CECT0-7870F
R1152	323-0177-00	B143555		RES.,FXD,FILM:680 OHM,1%,0.50W	91637	MFF1226G681R0F
R1154	315-0112-00			RES.,FXD,CMPSN:1.1K OHM,5%,0.25W	01121	CB1125
R1156	301-0271-00			RES.,FXD,CMPSN:270 OHM,5%,0.50W	01121	EB2715
R1161	323-0164-00	B010100	B039999	RES.,FXD,FILM:499 OHM,1%,0.50W	75042	CECT0-4990F
R1161	323-0163-00	B040000	B143554	RES.,FXD,FILM:487 OHM,1%,0.50W	75042	CECT0-4870F
R1161	323-0166-00	B143555		RES.,FXD,FILM:523 OHM,1%,0.50W	75042	CECT0-5230F
R1162	323-0172-00	B010100	B039999	RES.,FXD,FILM:604 OHM,1%,0.50W	91637	MFF1226G604R0F
R1162	323-0183-00	B040000	B143554	RES.,FXD,FILM:787 OHM,1%,0.50W	75042	CECT0-7870F
R1162	323-0177-00	B143555		RES.,FXD,FILM:680 OHM,1%,0.50W	91637	MFF1226G681R0F
R1164	315-0101-00			RES.,FXD,CMPSN:100 OHM,5%,0.25W	01121	CB1015
R1165	301-0101-00			RES.,FXD,CMPSN:100 OHM,5%,0.50W	01121	EB1015
R1166	301-0131-00			RES.,FXD,CMPSN:130 OHM,5%,0.50W	01121	EB1315
R1167	315-0362-00			RES.,FXD,CMPSN:3.6K OHM,5%,0.25W	01121	CB3625
R1168	315-0122-00			RES.,FXD,CMPSN:1.2K OHM,5%,0.25W	01121	CB1225
R1169	301-0331-00			RES.,FXD,CMPSN:330 OHM,5%,0.50W	01121	EB3315
R1171	301-0682-00			RES.,FXD,CMPSN:6.8K OHM,5%,0.50W	01121	EB6825
R1172	301-0682-00			RES.,FXD,CMPSN:6.8K OHM,5%,0.50W	01121	EB6825
R1173	301-0182-00			RES.,FXD,CMPSN:1.8K OHM,5%,0.5W	01121	EB1825
R1174	315-0470-00			RES.,FXD,CMPSN:47 OHM,5%,0.25W	01121	CB4705
R1175	321-0279-00	B010100	B039999	RES.,FXD,FILM:7.87K OHM,1%,0.125W	91637	MFF1816G78700F
R1175	321-0275-00	B040000		RES.,FXD,FILM:7.15K OHM,1%,0.125W	91637	MFF1816G71500F
R1176	322-0297-00			RES.,FXD,FILM:12.1K OHM,1%,0.25W	75042	CEBT0-1212F
R1177	323-0302-00			RES.,FXD,FILM:13.7K OHM,1%,0.50W	75042	CECT0-1372F
R1178	321-0197-00			RES.,FXD,FILM:1.1K OHM,1%,0.125W	91637	MFF1816G11000F

http://manoman.sqhill.com

Ckt No.	Tektronix Part No.	Serial/Model No. Eff	Dscont	Name & Description	Mfr Code	Mfr Part Number
R1179	315-0560-00			RES.,FXD,CMPSN:56 OHM,5%,0.25W	01121	CB5605
R1181	301-0682-00			RES.,FXD,CMPSN:6.8K OHM,5%,0.50W	01121	EB6825
R1182	301-0682-00			RES.,FXD,CMPSN:6.8K OHM,5%,0.50W	01121	EB6825
R1183	301-0182-00			RES.,FXD,CMPSN:1.8K OHM,5%,0.5W	01121	EB1825
R1184	315-0470-00			RES.,FXD,CMPSN:47 OHM,5%,0.25W	01121	CB4705
R1187	323-0302-00			RES.,FXD,FILM:13.7K OHM,1%,0.50W	75042	CECT0-1372F
R1188	321-0197-00			RES.,FXD,FILM:1.1K OHM,1%,0.125W	91637	MFF1816G11000F
R1189	315-0560-00			RES.,FXD,CMPSN:56 OHM,5%,0.25W	01121	CB5605
R1192	315-0121-00			RES.,FXD,CMPSN:120 OHM,5%,0.25W	01121	CB1215
R1193	315-0392-00			RES.,FXD,CMPSN:3.9K OHM,5%,0.25W	01121	CB3925
R1194	322-0133-00			RES.,FXD,FILM:237 OHM,1%,0.25W	75042	CEBT0-2370F
R1196	315-0121-00			RES.,FXD,CMPSN:120 OHM,5%,0.25W	01121	CB1215
R1197	315-0392-00			RES.,FXD,CMPSN:3.9K OHM,5%,0.25W	01121	CB3925
R1198	322-0133-00			RES.,FXD,FILM:237 OHM,1%,0.25W	75042	CEBT0-2370F
R1201	321-0291-00			RES.,FXD,FILM:10.5K OHM,1%,0.125W	91637	MFF1816G10501F
R1202	315-0181-00			RES.,FXD,CMPSN:180 OHM,5%,0.25W	01121	CB1815
R1203	315-0681-00			RES.,FXD,CMPSN:680 OHM,5%,0.25W	01121	CB6815
R1204	315-0562-00			RES.,FXD,CMPSN:5.6K OHM,5%,0.25W	01121	CB5625
R1206	321-0183-00			RES.,FXD,FILM:787 OHM,1%,0.125W	91637	MFF1816G787R0F
R1207	317-0560-00			RES.,FXD,CMPSN:56 OHM,5%,0.125W	01121	BB5605
R1209	315-0623-00			RES.,FXD,CMPSN:62K OHM,5%,0.25W	01121	CB6235
R1214	315-0182-00			RES.,FXD,CMPSN:1.8K OHM,5%,0.25W	01121	CB1825
R1216	315-0102-00			RES.,FXD,CMPSN:1K OHM,5%,0.25W	01121	CB1025
R1217	321-0149-00			RES.,FXD,FILM:348 OHM,1%,0.125W	91637	MFF1816G348R0F
R1218	321-0201-00			RES.,FXD,FILM:1.21K OHM,1%,0.125W	91637	MFF1816G12100F
R1219	315-0101-00			RES.,FXD,CMPSN:100 OHM,5%,0.25W	01121	CB1015
R1221	321-0258-00			RES.,FXD,FILM:4.75K OHM,1%,0.125W	91637	MFF1816G47500F
R1222	321-0340-00			RES.,FXD,FILM:34K OHM,1%,0.125W	91637	MFF1816G34001F
R1223	323-0636-07			RES.,FXD,FILM:50K OHM,0.1%,0.50W	91637	MFF1226C50001B
R1226	311-1226-00			RES.,VAR,NONWIR:2.5K OHM,20%,0.50W	32997	3386F-T04-252
R1227	323-0280-00	B010100	B010285	RES.,FXD,FILM:8.06K OHM,1%,0.50W	75042	CECT0-8061F
R1227	323-0278-00	B010286		RES.,FXD,FILM:7.68K OHM,1%,0.50W	75042	CECT0-7681F
R1228	311-1226-00			RES.,VAR,NONWIR:2.5K OHM,20%,0.50W	32997	3386F-T04-252
R1229	315-0101-00			RES.,FXD,CMPSN:100 OHM,5%,0.25W	01121	CB1015
R1235	315-0470-00	XB143555	B144449X	RES.,FXD,CMPSN:47 OHM,5%,0.25W	01121	CB4705
R1236	315-0472-00	XB144450		RES.,FXD,CMPSN:4.7K OHM,5%,0.25W	01121	CB4725
R1237	315-0242-00			RES.,FXD,CMPSN:2.4K OHM,5%,0.25W	01121	CB2425
R1238	315-0152-00			RES.,FXD,CMPSN:1.5K OHM,5%,0.25W	01121	CB1525
R1239	315-0272-00			RES.,FXD,CMPSN:2.7K OHM,5%,0.25W	01121	CB2725
R1240	317-0330-00			RES.,FXD,CMPSN:33 OHM,5%,0.125W	01121	BB3305
R1241	315-0221-00			RES.,FXD,CMPSN:220 OHM,5%,0.25W	01121	CB2215
R1242	317-0330-00			RES.,FXD,CMPSN:33 OHM,5%,0.125W	01121	BB3305
R1251	321-0054-00			RES.,FXD,FILM:35.7 OHM,5%,0.125W	91637	MFF1816G35R70F
R1252	315-0152-00			RES.,FXD,CMPSN:1.5K OHM,5%,0.25W	01121	CB1525
R1254	321-0248-00			RES.,FXD,FILM:3.74K OHM,1%,0.125W	91637	MFF1816G37400F
R1257	321-0142-00			RES.,FXD,FILM:294 OHM,1%,0.125W	91637	MFF1816G294R0F
R1261	321-0304-00			RES.,FXD,FILM:14.3K OHM,1%,0.125W	91637	MFF1816G14301F
R1262	321-0256-00			RES.,FXD,FILM:4.53K OHM,1%,0.125W	91637	MFF1816G45300F
R1263	315-0470-00			RES.,FXD,CMPSN:47 OHM,5%,0.25W	01121	CB4705
R1264	321-0262-00			RES.,FXD,FILM:5.23K OHM,1%,0.125W	91637	MFF1816G52300F
R1266	315-0562-00			RES.,FXD,CMPSN:5.6K OHM,5%,0.25W	01121	CB5625
R1267	321-0307-00			RES.,FXD,FILM:15.4K OHM,1%,0.125W	91637	MFF1816G15401F
R1268	315-0470-00			RES.,FXD,CMPSN:47 OHM,5%,0.25W	01121	CB4705

http://manoman.sqhill.com

Ckt No.	Tektronix Part No.	Serial/Model No. Eff	Dscont	Name & Description	Mfr Code	Mfr Part Number
R1269	321-0254-00			RES.,FXD,FILM:4.32K OHM,1%,0.125W	91637	MFF1816G43200F
R1271	315-0331-00			RES.,FXD,CMPSN:330 OHM,5%,0.25W	01121	CB3315
R1272	315-0202-00			RES.,FXD,CMPSN:2K OHM,5%,0.25W	01121	CB2025
R1300	311-1197-00			RES.,VAR,NONWIR:20K OHM,10%,1W	12697	381-CM39696
R1301	315-0470-00			RES.,FXD,CMPSN:47 OHM,5%,0.25W	01121	CB4705
R1302	315-0912-00			RES.,FXD,CMPSN:9.1K OHM,5%,0.25W	01121	CB9125
R1303	321-0216-00			RES.,FXD,FILM:1.74K OHM,1%,0.125W	91637	MFF1816G17400F
R1306	321-0216-00			RES.,FXD,FILM:1.74K OHM,1%,0.125W	91637	MFF1816G17400F
R1307	321-0228-00			RES.,FXD,FILM:2.32K OHM,1%,0.125W	91637	MFF1816G23200F
R1308	311-1224-00			RES.,VAR,NONWIR:500 OHM,20%,0.50W	32997	3386F-T04-501
R1313	321-0326-00			RES.,FXD,FILM:24.3K OHM,1%,0.125W	91637	MFF1816G24301F
R1314	321-0250-00			RES.,FXD,FILM:3.92K OHM,1%,0.125W	91637	MFF1816G39200F
R1321	321-0230-00			RES.,FXD,FILM:2.43K OHM,1%,0.125W	91637	MFF1816G24300F
R1322	321-0231-00			RES.,FXD,FILM:2.49K OHM,1%,0.125W	91637	MFF1816G24900F
R1325	311-1228-00			RES.,VAR,NONWIR:10K OHM,20%,0.50W	32997	3386F-T04-103
R1326	321-0295-00			RES.,FXD,FILM:11.5K OHM,1%,0.125W	91637	MFF1816G11501F
R1327	321-0234-00			RES.,FXD,FILM:2.67K OHM,1%,0.125W	91637	MFF1816G26700F
R1328	321-0246-00			RES.,FXD,FILM:3.57K OHM,1%,0.125W	91637	MFF1816G35700F
R1329	321-0299-00			RES.,FXD,FILM:12.7K OHM,1%,0.125W	91637	MFF1816G12701F
R1331	315-0243-00			RES.,FXD,CMPSN:24K OHM,5%,0.25W	01121	CB2435
R1333	315-0203-00			RES.,FXD,CMPSN:20K OHM,5%,0.25W	01121	CB2035
R1335	315-0202-00			RES.,FXD,CMPSN:2K OHM,5%,0.25W	01121	CB2025
R1336	315-0100-00			RES.,FXD,CMPSN:10 OHM,5%,0.25W	01121	CB1005
R1338	315-0681-00			RES.,FXD,CMPSN:680 OHM,5%,0.25W	01121	CB6815
R1341	315-0911-00			RES.,FXD,CMPSN:910 OHM,5%,0.25W	01121	CB9115
R1342	315-0332-00			RES.,FXD,CMPSN:3.3K OHM,5%,0.25W	01121	CB3325
R1343	321-0250-00			RES.,FXD,FILM:3.92K OHM,1%,0.125W	91637	MFF1816G39200F
R1344	321-0326-00			RES.,FXD,FILM:24.3K OHM,1%,0.125W	91637	MFF1816G24301F
R1348	311-1222-00			RES.,VAR,NONWIR:100 OHM,20%,0.50W	32997	3386F-T04-101
R1354	321-0085-00			RES.,FXD,FILM:75 OHM,1%,0.125W	91637	MFF1816G75R00F
R1355	311-1225-00			RES.,VAR,NONWIR:1K OHM,20%,0.50W	32997	3386F-T04-102
R1356	315-0162-00			RES.,FXD,CMPSN:1.6K OHM,5%,0.25W	01121	CB1625
R1357	321-0225-00			RES.,FXD,FILM:2.15K OHM,1%,0.125W	91637	MFF1816G21500F
R1361	315-0820-00			RES.,FXD,CMPSN:82 OHM,5%,0.25W	01121	CB8205
R1362	315-0132-00			RES.,FXD,CMPSN:1.3K OHM,5%,0.25W	01121	CB1325
R1364	321-0161-00	B010100	B049999	RES.,FXD,FILM:464 OHM,1%,0.125W	91637	MFF1816G464R0F
R1364	321-0164-00	B050000		RES.,FXD,FILM:499 OHM,1%,0.125W	91637	MFF1816G499R0F
R1365	315-0271-00			RES.,FXD,CMPSN:270 OHM,5%,0.25W	01121	CB2715
R1366	311-0605-00			RES.,VAR,NONWIR:200 OHM,10%,0.50W	80740	62-54-3
R1367	315-0122-00			RES.,FXD,CMPSN:1.2K OHM,5%,0.25W	01121	CB1225
R1368	301-0511-00			RES.,FXD,CMPSN:510 OHM,5%,0.50W	01121	EB5115
R1369	315-0103-00			RES.,FXD,CMPSN:10K OHM,5%,0.25W	01121	CB1035
R1371	315-0110-00			RES.,FXD,CMPSN:11 OHM,5%,0.25W	01121	CB1105
R1372	321-0117-00			RES.,FXD,FILM:162 OHM,1%,0.125W	91637	MFF1816G162R0F
R1373	323-0102-00			RES.,FXD,FILM:113 OHM,1%,0.50W	75042	CECT0-1130F
R1374	321-0117-00			RES.,FXD,FILM:162 OHM,1%,0.125W	91637	MFF1816G162R0F
R1375	317-0680-00			RES.,FXD,CMPSN:68 OHM,5%,0.125W	01121	BB6805
R1400	311-0566-00			RES.,VAR,NONWIR:5K OHM,20%	12697	381-CM39672
R1401	315-0681-00			RES.,FXD,CMPSN:680 OHM,5%,0.25W	01121	CB6815
R1402	315-0303-00			RES.,FXD,CMPSN:30K OHM,5%,0.25W	01121	CB3035
R1407	315-0153-00			RES.,FXD,CMPSN:15K OHM,5%,0.25W	01121	CB1535
R1409	323-0793-07			RES.,FXD,FILM:2.5M OHM,0.1%,0.50W	91637	MFF1226C25003B
R1410	323-0498-07			RES.,FXD,FILM:1.5M OHM,0.1%,0.50W	91637	MFF1226C15003B

http://manoman.sqhill.com

Ckt No.	Tektronix Part No.	Serial/Model No. Eff	Dscont	Name & Description	Mfr Code	Mfr Part Number
R1411	323-0740-07			RES.,FXD,FILM:500K OHM,0.1%,0.50W	91637	MFF1226C50002B
R1412	323-0742-07			RES.,FXD,FILM:250K OHM,0.1%,0.50W	91637	MFF1226C25002B
R1413	323-0636-07			RES.,FXD,FILM:50K OHM,0.1%,0.50W	91637	MFF1226C50001B
R1414	323-0385-07			RES.,FXD,FILM:100K OHM,0.1%,0.50W	91637	MFF1226C10002B
R1415	323-0792-07			RES.,FXD,FILM:60K OHM,0.1%,0.50W	91637	MFF1226C60001B
R1416	323-0318-07			RES.,FXD,FILM:20K OHM,0.1%,0.50W	91637	MFF1226G20001B
R1418	323-0745-07			RES.,FXD,FILM:5M OHM,0.1%,0.50W	03888	PME-655MEG
R1419	325-0106-00			RES.,FXD,FILM:15M OHM,0.1%,0.50W	03888	PME-7015MEG
R1421	321-0386-00			RES.,FXD,FILM:102K OHM,1%,0.125W	91637	MFF1816G10202F
R1422	315-0434-00			RES.,FXD,CMPSN:430K OHM,5%,0.25W	01121	CB4345
R1431	315-0244-00			RES.,FXD,CMPSN:240K OHM,5%,0.25W	01121	CB2445
R1437	321-0261-00			RES.,FXD,FILM:5.11K OHM,1%,0.125W	91637	MFF1816G51100F
R1441	321-0181-00			RES.,FXD,FILM:750 OHM,1%,0.125W	91637	MFF1816G750R0F
R1450	323-0289-00	B010100	B010285	RES.,FXD,FILM:10K OHM,1%,0.50W	75042	CECT0-1002F
R1450	323-0292-00	B010286		RES.,FXD,FILM:10.7K OHM,1%,0.50W	91637	MFF1226G10701F
R1451	323-0793-07			RES.,FXD,FILM:2.5M OHM,0.1%,0.50W	91637	MFF1226C25003B
R1452	323-0498-07			RES.,FXD,FILM:1.5M OHM,0.1%,0.50W	91637	MFF1226C15003B
R1453	323-0740-07			RES.,FXD,FILM:500K OHM,0.1%,0.50W	91637	MFF1226C50002B
R1454	323-0742-07			RES.,FXD,FILM:250K OHM,0.1%,0.50W	91637	MFF1226C25002B
R1455	323-0402-07			RES.,FXD,FILM:150K OHM,0.1%,0.50W	91637	MFF1226C15002B
R1456	323-0636-07			RES.,FXD,FILM:50K OHM,0.1%,0.50W	91637	MFF1226C5
R1458	323-0745-07			RES.,FXD,FILM:5M OHM,0.1%,0.50W	03888	PME-655MEG
R1459	325-0106-00			RES.,FXD,FILM:15M OHM,0.1%,0.50W	03888	PME-7015MEG
R1461	321-0347-00			RES.,FXD,FILM:40.2K OHM,1%,0.125W	91637	MFF1816G40201F
R1462	321-0393-00			RES.,FXD,FILM:121K OHM,1%,0.125W	91637	MFF1816G12102F
R1463	315-0204-00			RES.,FXD,CMPSN:200K OHM,5%,0.25W	01121	CB2045
R1481	323-0140-00			RES.,FXD,FILM:280 OHM,1%,0.50W	75042	CECT0-2800F
R1482	315-0470-00			RES.,FXD,CMPSN:47 OHM,5%,0.25W	01121	CB4705
R1484	323-0140-00			RES.,FXD,FILM:280 OHM,1%,0.50W	75042	CECT0-2800F
R1486	321-0216-00			RES.,FXD,FILM:1.74K OHM,1%,0.125W	91637	MFF1816G17400F
R1487	315-0363-00			RES.,FXD,CMPSN:36K OHM,5%,0.25W	01121	CB3635
R1488	321-0201-00			RES.,FXD,FILM:1.21K OHM,1%,0.125W	91637	MFF1816G12100F
R1497	321-0062-00			RES.,FXD,FILM:43.2 OHM,1%,0.125W	91637	MFF1816G43R20F
R1499	301-0160-00			RES.,FXD,CMPSN:16 OHM,5%,0.50W	01121	EB1605
R1501	315-0473-00			RES.,FXD,CMPSN:47K OHM,5%,0.25W	01121	CB4735
R1503	315-0103-00			RES.,FXD,CMPSN:10K OHM,5%,0.25W	01121	CB1035
R1506	315-0203-00			RES.,FXD,CMPSN:20K OHM,5%,0.25W	01121	CB2035
R1507	315-0512-00			RES.,FXD,CMPSN:5.1K OHM,5%,0.25W	01121	CB5125
R1509	315-0393-00			RES.,FXD,CMPSN:39K OHM,5%,0.25W	01121	CB3935
R1511	315-0104-00			RES.,FXD,CMPSN:100K OHM,5%,0.25W	01121	CB1045
R1512	315-0153-00			RES.,FXD,CMPSN:15K OHM,5%,0.25W	01121	CB1535
R1516	315-0434-00			RES.,FXD,CMPSN:430K OHM,5%,0.25W	01121	CB4345
R1517	315-0153-00			RES.,FXD,CMPSN:15K OHM,5%,0.25W	01121	CB1535
R1518	315-0153-00			RES.,FXD,CMPSN:15K OHM,5%,0.25W	01121	CB1535
R1519	315-0822-00			RES.,FXD,CMPSN:8.2K OHM,5%,0.25W	01121	CB8225
R1521	315-0361-00			RES.,FXD,CMPSN:360 OHM,5%,0.25W	01121	CB3615
R1522	315-0222-00			RES.,FXD,CMPSN:2.2K OHM,5%,0.25W	01121	CB2225
R1523	315-0911-00			RES.,FXD,CMPSN:910 OHM,5%,0.25W	01121	CB9115
R1524	315-0623-00			RES.,FXD,CMPSN:62K OHM,5%,0.25W	01121	CB6235
R1526	315-0121-00			RES.,FXD,CMPSN:120 OHM,5%,0.25W	01121	CB1215
R1531	315-0103-00			RES.,FXD,CMPSN:10K OHM,5%,0.25W	01121	CB1035
R1534	315-0684-00			RES.,FXD,CMPSN:680K OHM,5%,0.25W	01121	CB6845
R1536	316-0225-00			RES.,FXD,CMPSN:2.2M OHM,10%,0.25W	01121	CB2251

http://manoman.sqhill.com

Ckt No.	Tektronix Part No.	Serial/Model No. Eff	Dscont	Name & Description	Mfr Code	Mfr Part Number
R1538	315-0153-00			RES.,FXD,CMPSN:15K OHM,5%,0.25W	01121	CB1535
R1539	315-0103-00			RES.,FXD,CMPSN:10K OHM,5%,0.25W	01121	CB1035
R1541	315-0683-00			RES.,FXD,CMPSN:68K OHM,5%,0.25W	01121	CB6835
R1542	315-0154-00			RES.,FXD,CMPSN:150K OHM,5%,0.25W	01121	CB1545
R1544	315-0332-00			RES.,FXD,CMPSN:3.3K OHM,5%,0.25W	01121	CB3325
R1545	315-0682-00			RES.,FXD,CMPSN:6.8K OHM,5%,0.25W	01121	CB6825
R1546	315-0333-00			RES.,FXD,CMPSN:33K OHM,5%,0.25W	01121	CB3335
R1547	315-0392-00			RES.,FXD,CMPSN:3.9K OHM,5%,0.25W	01121	CB3925
R1548	315-0682-00			RES.,FXD,CMPSN:6.8K OHM,5%,0.25W	01121	CB6825
R1549	315-0222-00			RES.,FXD,CMPSN:2.2K OHM,5%,0.25W	01121	CB2225
R1551	315-0152-00			RES.,FXD,CMPSN:1.5K OHM,5%,0.25W	01121	CB1525
R1552	315-0512-00			RES.,FXD,CMPSN:5.1K OHM,5%,0.25W	01121	CB5125
R1553	315-0622-00			RES.,FXD,CMPSN:6.2K OHM,5%,0.25W	01121	CB6225
R1554	315-0300-00			RES.,FXD,CMPSN:30 OHM,5%,0.25W	01121	CB3005
R1555	315-0622-00			RES.,FXD,CMPSN:6.2K OHM,5%,0.25W	01121	CB6225
R1557	301-0511-00			RES.,FXD,CMPSN:510 OHM,5%,0.50W	01121	EB5115
R1558	321-0217-00			RES.,FXD,FILM:1.78K OHM,1%,0.125W	91637	MFF1816G17800F
R1559	315-0101-00			RES.,FXD,CMPSN:100 OHM,5%,0.25W	01121	CB1015
R1560	311-0635-00			RES.,VAR,NONWIR:1K OHM,10%,0.50W	73138	82-32-0
R1561	321-0241-00	B010100	B146225	RES.,FXD,FILM:3.16K OHM,1%,0.125W	91637	MFF1816G31600F
R1561	321-0240-00	B142666		RES.,FXD,FILM:3.09K OHM,1%,0.125W	91637	MFF1816G30900F
R1563	321-0295-00			RES.,FXD,FILM:11.5K OHM,1%,0.125W	91637	MFF1816G11501F
R1564	321-0253-00	B010100	B129999	RES.,FXD,FILM:4.22K OHM,1%,0.125W	91637	MFF1816G42200F
R1564	321-0250-00	B130000		RES.,FXD,FILM:3.92K OHM,1%,0.125W	91637	MFF1816G39200F
R1567	321-0206-00			RES.,FXD,FILM:1.37K OHM,1%,0.125W	91637	MFF1816G13700F
R1568	315-0823-00			RES.,FXD,CMPSN:82K OHM,5%,0.25W	01121	CB8235
R1569	311-0310-00			RES.,VAR,NONWIR:5K OHM,20%,0.50W	01121	W-7350A
R1570	311-0608-00			RES.,VAR,NONWIR:2K OHM,10%,0.75W	01121	W8156
R1571	315-0124-00			RES.,FXD,CMPSN:120K OHM,5%,0.25W	01121	CB1245
R1572	321-0243-00			RES.,FXD,FILM:3.32K OHM,1%,0.125W	91637	MFF1816G33200F
R1573	321-0243-00			RES.,FXD,FILM:3.32K OHM,1%,0.125W	91637	MFF1816G33200F
R1574	321-0254-00			RES.,FXD,FILM:4.32K OHM,1%,0.125W	91637	MFF1816G43200F
R1575	315-0103-00			RES.,FXD,CMPSN:10K OHM,5%,0.25W	01121	CB1035
R1576	315-0473-00			RES.,FXD,CMPSN:47K OHM,5%,0.25W	01121	CB4735
R1577	315-0104-00			RES.,FXD,CMPSN:100K OHM,5%,0.25W	01121	CB1045
R1579	307-0106-00	B010100	B139999	RES.,FXD,CMPSN:4.7 OHM,5%,0.25W	01121	CB47G5
R1579	317-0100-00	B140000		RES.,FXD,CMPSN:10 OHM,5%,0.125W	01121	BB1005
R1581	315-0103-00			RES.,FXD,CMPSN:10K OHM,5%,0.25W	01121	CB1035
R1582	315-0103-00			RES.,FXD,CMPSN:10K OHM,5%,0.25W	01121	CB1035
R1583	315-0103-00			RES.,FXD,CMPSN:10K OHM,5%,0.25W	01121	CB1035
R1584	315-0103-00			RES.,FXD,CMPSN:10K OHM,5%,0.25W	01121	CB1035
R1585	315-0223-00			RES.,FXD,CMPSN:22K OHM,5%,0.25W	01121	CB2235
R1586	315-0471-00			RES.,FXD,CMPSN:470 OHM,5%,0.25W	01121	CB4715
R1587	315-0392-00			RES.,FXD,CMPSN:3.9K OHM,5%,0.25W	01121	CB3925
R1588	315-0912-00			RES.,FXD,CMPSN:9.1K OHM,5%,0.25W	01121	CB9125
R1589	315-0752-00			RES.,FXD,CMPSN:7.5K OHM,5%,0.25W	01121	CB7525
R1590	315-0102-00			RES.,FXD,CMPSN:1K OHM,5%,0.25W	01121	CB1025
R1591	315-0203-00			RES.,FXD,CMPSN:20K OHM,5%,0.25W	01121	CB2035
R1592	315-0911-00			RES.,FXD,CMPSN:910 OHM,5%,0.25W	01121	CB9115
R1593	315-0203-00			RES.,FXD,CMPSN:20K OHM,5%,0.25W	01121	CB2035
R1594	315-0102-00			RES.,FXD,CMPSN:1K OHM,5%,0.25W	01121	CB1025
R1595	315-0102-00			RES.,FXD,CMPSN:1K OHM,5%,0.25W	01121	CB1025
R1596	315-0102-00			RES.,FXD,CMPSN:1K OHM,5%,0.25W	01121	CB1025

http://manoman.sqhill.com

Ckt No.	Tektronix Part No.	Serial/Model No. Eff	Dscont	Name & Description	Mfr Code	Mfr Part Number
R1597	315-0102-00			RES.,FXD,CMPSN:1K OHM,5%,0.25W	01121	CB1025
R1598	315-0510-00			RES.,FXD,CMPSN:51 OHM,5%,0.25W	01121	CB5105
R1599	315-0510-00			RES.,FXD,CMPSN:51 OHM,5%,0.25W	01121	CB5105
R1600	316-0471-00			RES.,FXD,CMPSN:470 OHM,10%,0.25W	01121	CB4711
R1601	301-0102-00			RES.,FXD,CMPSN:1K OHM,5%,0.50W	01121	EB1025
R1602	301-0153-00			RES.,FXD,CMPSN:15K OHM,5%,0.50W	01121	EB1535
R1603	301-0624-00			RES.,FXD,CMPSN:620K OHM,5%,0.50W	01121	EB6245
R1604	301-0624-00			RES.,FXD,CMPSN:620K OHM,5%,0.50W	01121	EB6245
R1605	301-0155-00			RES.,FXD,CMPSN:1.5M OHM,5%,0.50W	01121	EB1555
R1606	301-0155-00			RES.,FXD,CMPSN:1.5M OHM,5%,0.50W	01121	EB1555
R1608	301-0155-00			RES.,FXD,CMPSN:1.5M OHM,5%,0.50W	01121	EB1555
R1609	301-0155-00			RES.,FXD,CMPSN:1.5M OHM,5%,0.50W	01121	EB1555
R1611	315-0392-00			RES.,FXD,CMPSN:3.9K OHM,5%,0.25W	01121	CB3925
R1612	315-0392-00			RES.,FXD,CMPSN:3.9K OHM,5%,0.25W	01121	CB3925
R1613	301-0472-00			RES.,FXD,CMPSN:4.7K OHM,5%,0.50W	01121	EB4725
R1614	301-0331-00			RES.,FXD,CMPSN:330 OHM,5%,0.50W	01121	EB3315
R1616	315-0150-00			RES.,FXD,CMPSN:15 OHM,5%,0.25W	01121	CB1505
R1618	315-0150-00			RES.,FXD,CMPSN:15 OHM,5%,0.25W	01121	CB1505
R1619	321-0231-00			RES.,FXD,FILM:2.49K OHM,1%,0.125W	91637	MFF1816G24900F
R1621	315-0102-00			RES.,FXD,CMPSN:1K OHM,5%,0.25W	01121	CB1025
R1622	321-0294-00			RES.,FXD,FILM:11.3K OHM,1%,0.125W	91637	MFF1816G11301F
R1623	321-0419-00			RES.,FXD,FILM:226K OHM,1%,0.125W	91637	MFF1816G22602F
R1624	315-0102-00			RES.,FXD,CMPSN:1K OHM,5%,0.25W	01121	CB1025
R1625	311-1254-00			RES.,VAR,NONWIR:1M OHM,20%,0.50W	32997	3386F-T05-105
R1626	315-0395-00			RES.,FXD,CMPSN:3.9M OHM,5%,0.25W	01121	CB3955
R1627	315-0474-00			RES.,FXD,CMPSN:470K OHM,5%,0.25W	01121	CB4745
R1633	301-0272-00			RES.,FXD,CMPSN:2.7K OHM,5%,0.50W	01121	EB2725
R1640	311-0254-00			RES.,VAR,NONWIR:5M OHM,10%,1W	12697	CM29709
R1641	301-0116-00			RES.,FXD,CMPSN:11M OHM,5%,0.50W	01121	EB1165
R1642A				RES.,FXD,FILM:21M OHM		
R1642B	307-0386-00			RES.,FXD,FILM:500K OHM	80009	307-0386-00
R1642C				RES.,FXD,FILM:29.5M OHM		
R1642D				RES.,FXD,FILM:7.5K OHM		
R1646	315-0393-00			RES.,FXD,CMPSN:39K OHM,5%,0.25W	01121	CB3935
R1651	315-0226-00			RES.,FXD,CMPSN:22M OHM,5%,0.25W	01121	CB2265
R1656	315-0103-00			RES.,FXD,CMPSN:10K OHM,5%,0.25W	01121	CB1035
R1660	311-1230-00			RES.,VAR,NONWIR:20K OHM,20%,0.50W	32997	3386F-T04-203
R1661	321-0306-00			RES.,FXD,FILM:15K OHM,1%,0.125W	91637	MFF1816G15001F
R1666	315-0393-00			RES.,FXD,CMPSN:39K OHM,5%,0.25W	01121	CB3935
R1667	315-0101-00			RES.,FXD,CMPSN:100 OHM,5%,0.25W	01121	CB1015
R1668	315-0104-00			RES.,FXD,CMPSN:100K OHM,5%,0.25W	01121	CB1045
R1669	315-0226-00			RES.,FXD,CMPSN:22M OHM,5%,0.25W	01121	CB2265
R1681	301-0683-00			RES.,FXD,CMPSN:68K OHM,5%,0.50W	01121	EB6835
R1682	301-0225-00			RES.,FXD,CMPSN:2.2M OHM,5%,0.50W	01121	EB2255
R1684	301-0103-00			RES.,FXD,CMPSN:10K OHM,5%,0.50W	01121	EB1035
R1685	301-0105-00			RES.,FXD,CMPSN:1M OHM,5%,0.50W	01121	EB1055
R1687	316-0473-00			RES.,FXD,CMPSN:47K OHM,10%,0.25W	01121	CB4731
R1700	311-1035-00			RES.,VAR,NONWIR:50K OHM,10%,0.50W	80740	62-62-3
R1701	321-0352-00			RES.,FXD,FILM:45.3K OHM,1%,0.125W	91637	MFF1816G45301F
R1702	321-0352-00			RES.,FXD,FILM:45.3K OHM,1%,0.125W	91637	MFF1816G45301F
R1703	321-0283-00			RES.,FXD,FILM:8.66K OHM,1%,0.125W	91637	MFF1816G86600F
R1704	321-0295-00			RES.,FXD,FILM:11.5K OHM,1%,0.125W	91637	MFF1816G11501F
R1706	321-0294-00			RES.,FXD,FILM:11.3K OHM,1%,0.125W	91637	MFF1816G11301F

http://manoman.sqhill.com

Ckt No.	Tektronix Part No.	Serial/Model No. Eff	Dscont	Name & Description	Mfr Code	Mfr Part Number
R1708	321-0272-00			RES.,FXD,FILM:6.65K OHM,1%,0.125W	91637	MFF1816G66500F
R1709	321-0314-00			RES.,FXD,FILM:18.2K OHM,1%,0.125W	91637	MFF1816G18201F
R1710	311-0633-00			RES.,VAR,NONWIR:5K OHM,10%,0.50W	73138	82-30-0
R1711	321-0281-00	B010100	B059999	RES.,FXD,FILM:8.25K OHM,1%,0.125W	91637	MFF1816G82500F
R1711	321-0272-00	B060000		RES.,FXD,FILM:6.65K OHM,1%,0.125W	91637	MFF1816G66500F
R1712	321-0310-00	B010100	B059999	RES.,FXD,FILM:16.5K OHM,1%,0.125W	91637	MFF1816G16501F
R1712	321-0301-00	B060000		RES.,FXD,FILM:13.3K OHM,1%,0.125W	91637	MFF1816G13301F
R1714	321-0289-00			RES.,FXD,FILM:10K OHM,1%,0.125W	91637	MFF1816G10001F
R1715	321-0294-00			RES.,FXD,FILM:11.3K OHM,1%,0.125W	91637	MFF1816G11301F
R1717	301-0301-00			RES.,FXD,CMPSN:300 OHM,5%,0.50W	01121	EB3015
R1718	315-0751-00			RES.,FXD,CMPSN:750 OHM,5%,0.25W	01121	CB7515
R1721	321-0340-00			RES.,FXD,FILM:34K OHM,1%,0.125W	91637	MFF1816G34001F
R1722	321-0307-00			RES.,FXD,FILM:15.4K OHM,1%,0.125W	91637	MFF1816G15401F
R1723	315-0182-00			RES.,FXD,CMPSN:1.8K OHM,5%,0.25W	01121	CB1825
R1725	321-0432-00			RES.,FXD,FILM:309K OHM,1%,0.125W	91637	MFF1816G30902F
R1727	315-0102-00			RES.,FXD,CMPSN:1K OHM,5%,0.25W	01121	CB1025
R1728	315-0100-00			RES.,FXD,CMPSN:10 OHM,5%,0.25W	01121	CB1005
R1729	315-0275-00			RES.,FXD,CMPSN:2.7M OHM,5%,0.25W	01121	CB2755
R1731	321-0305-00			RES.,FXD,FILM:14.7K OHM,1%,0.125W	91637	MFF1816G14701F
R1732	322-0609-00			RES.,FXD,FILM:33.3K OHM,1%,0.25W	75042	CEBT0-3333F
R1734	315-0220-00			RES.,FXD,CMPSN:22 OHM,5%,0.25W	01121	CB2205
R1735	321-0154-00			RES.,FXD,FILM:392 OHM,1%,0.125W	91637	MFF1816G392R0F
R1737	321-0405-00			RES.,FXD,FILM:162K OHM,1%,0.125W	91637	MFF1816G16202F
R1738	321-0310-00			RES.,FXD,FILM:16.5K OHM,1%,0.125W	91637	MFF1816G16501F
R1741	315-0361-00			RES.,FXD,CMPSN:360 OHM,5%,0.25W	01121	CB3615
R1742	315-0100-00			RES.,FXD,CMPSN:10 OHM,5%,0.25W	01121	CB1005
R1745	315-0241-00			RES.,FXD,CMPSN:240 OHM,5%,0.25W	01121	CB2415
R1746	315-0220-00			RES.,FXD,CMPSN:22 OHM,5%,0.25W	01121	CB2205
R1749	315-0751-00			RES.,FXD,CMPSN:750 OHM,5%,0.25W	01121	CB7515
R1751	315-0220-00			RES.,FXD,CMPSN:22 OHM,5%,0.25W	01121	CB2205
R1752	315-0240-00			RES.,FXD,CMPSN:24 OHM,5%,0.25W	01121	CB2405
R1754	315-0472-00			RES.,FXD,CMPSN:4.7K OHM,5%,0.25W	01121	CB4725
R1755	315-0202-00			RES.,FXD,CMPSN:2K OHM,5%,0.25W	01121	CB2025
R1761	315-0244-00			RES.,FXD,CMPSN:240K OHM,5%,0.25W	01121	CB2445
R1762	321-0222-00			RES.,FXD,FILM:2K OHM,1%,0.125W	91637	MFF1816G20000F
R1765	311-0609-00			RES.,VAR,NONWIR:2K OHM,10%,0.50W	73138	82-26-0
R1766	323-0314-00			RES.,FXD,FILM:18.2K OHM,1%,0.50W	75042	CECT0-1822F
R1768	315-0205-00			RES.,FXD,CMPSN:2M OHM,5%,0.25W	01121	CB2055
R1769	321-0350-00			RES.,FXD,FILM:43.2K OHM,1%,0.125W	91637	MFF1816G43201F
R1771	321-0303-00			RES.,FXD,FILM:14K OHM,1%,0.125W	91637	MFF1816G14001F
R1773	321-0164-00			RES.,FXD,FILM:499 OHM,1%,0.125W	91637	MFF1816G499R0F
R1774	315-0121-00			RES.,FXD,CMPSN:120 OHM,5%,0.25W	01121	CB1215
R1776	321-0321-00			RES.,FXD,FILM:21.5K OHM,1%,0.125W	91637	MFF1816G21501F
R1777	321-0363-00			RES.,FXD,FILM:59K OHM,1%,0.125W	91637	MFF1816G59001F
R1778	322-0643-00			RES.,FXD,FILM:600K OHM,1%,0.25W	75042	CEBT0-6003F
R1779	315-0304-00			RES.,FXD,CMPSN:300K OHM,5%,0.25W	01121	CB3045
R1781	315-0752-00			RES.,FXD,CMPSN:7.5K OHM,5%,0.25W	01121	CB7525
R1782	315-0101-00			RES.,FXD,CMPSN:100 OHM,5%,0.25W	01121	CB1015
R1790	311-0963-00			RES.,VAR,WW:5K OHM,10%	01121	W-7577A
R1792	311-1235-00			RES.,VAR,NONWIR:100K OHM,20%,0.50W	32997	3386F-T04-104
R1794	311-1227-00			RES.,VAR,NONWIR:5K OHM,20%,0.50W	32997	3386F-T04-502
R1796	311-1226-00			RES.,VAR,NONWIR:2.5K OHM,20%,0.50W	32997	3386F-T04-252
R1797	321-0297-00			RES.,FXD,FILM:12.1K OHM,1%,0.125W	91637	MFF1816G12101F

http://manoman.sqhill.com

Ckt No.	Tektronix Part No.	Serial/Model No. Eff	Dscont	Name & Description	Mfr Code	Mfr Part Number
R1798	321-0352-00			RES.,FXD,FILM:45.3K OHM,1%,0.125W	91637	MFF1816G45301F
R1799	311-1099-00			RES.,VAR,NONWIR:100K OHM,0.5W	01121	WA1G040S104AZ
R1801	315-0753-00			RES.,FXD,CMPSN:75K OHM,5%,0.25W	01121	CB7535
R1802	301-0154-00			RES.,FXD,CMPSN:150K OHM,5%,0.50W	01121	EB1545
R1803	315-0753-00			RES.,FXD,CMPSN:75K OHM,5%,0.25W	01121	CB7535
R1804	315-0911-00			RES.,FXD,CMPSN:910 OHM,5%,0.25W	01121	CB9115
R1805	316-0471-00			RES.,FXD,CMPSN:470 OHM,10%,0.25W	01121	CB4711
R1806	315-0753-00			RES.,FXD,CMPSN:75K OHM,5%,0.25W	01121	CB7535
R1811	301-0225-00			RES.,FXD,CMPSN:2.2M OHM,5%,0.50W	01121	EB2255
R1812	301-0431-00			RES.,FXD,CMPSN:430 OHM,5%,0.50W	01121	EB4315
R1813	301-0431-00			RES.,FXD,CMPSN:430 OHM,5%,0.50W	01121	EB4315
R1814	301-0151-00			RES.,FXD,CMPSN:150 OHM,5%,0.50W	01121	EB1515
R1822	301-0184-00			RES.,FXD,CMPSN:180K OHM,5%,0.50W	01121	EB1845
R1823	301-0184-00			RES.,FXD,CMPSN:180K OHM,5%,0.50W	01121	EB1845
R1824	302-0685-00			RES.,FXD,CMPSN:6.8M OHM,10%,0.50W	01121	EB6851
R1825	315-0471-00			RES.,FXD,CMPSN:470 OHM,5%,0.25W	01121	CB4715
R1828	303-0224-00			RES.,FXD,CMPSN:220K OHM,5%,1W	01121	GB2245
R1829	315-0433-00			RES.,FXD,CMPSN:43K OHM,5%,0.25W	01121	CB4335
R1831	307-0113-00			RES.,FXD,CMPSN:5.1 OHM,5%,0.25W	01121	CB51G5
R1834	301-0220-00			RES.,FXD,CMPSN:22 OHM,5%,0.50W	01121	EB2205
R1836	302-0105-00			RES.,FXD,CMPSN:1M OHM,10%,0.50W	01121	EB1051
R1841	301-0220-00			RES.,FXD,CMPSN:22 OHM,5%,0.50W	01121	EB2205
R1846	316-0471-00			RES.,FXD,CMPSN:470 OHM,10%,0.25W	01121	CB4711
R1847	316-0471-00			RES.,FXD,CMPSN:470 OHM,10%,0.25W	01121	CB4711
R1848	316-0274-00			RES.,FXD,CMPSN:270K OHM,10%,0.25W	01121	CB2741
R1901	315-0392-00			RES.,FXD,CMPSN:3.9K OHM,5%,0.25W	01121	CB3925
R1902	315-0753-00			RES.,FXD,CMPSN:75K OHM,5%,0.25W	01121	CB7535
R1903	315-0273-00	XB143850	B149999	RES.,FXD,CMPSN:27K OHM,5%,0.25W	01121	CB2735
R1903	315-0104-00	B150000		RES.,FXD,CMPSN:100K OHM,5%,0.25W	01121	CB1045
R1904	315-0562-00			RES.,FXD,CMPSN:5.6K OHM,5%,0.25W	01121	CB5625
R1905	315-0223-00			RES.,FXD,CMPSN:22K OHM,5%,0.25W	01121	CB2235
R1916	315-0123-00			RES.,FXD,CMPSN:12K OHM,5%,0.25W	01121	CB1235
R1917	315-0224-00			RES.,FXD,CMPSN:220K OHM,5%,0.25W	01121	CB2245
R1918	315-0154-00			RES.,FXD,CMPSN:150K OHM,5%,0.25W	01121	CB1545
R1919	321-0366-00			RES.,FXD,FILM:63.4K OHM,1%,0.125W	91637	MFF1816G63401F
R1921	315-0471-00			RES.,FXD,CMPSN:470 OHM,5%,0.25W	01121	CB4715
R1922	321-0313-00			RES.,FXD,FILM:17.8K OHM,1%,0.125W	91637	MFF1816G17801F
R1924	315-0560-00			RES.,FXD,CMPSN:56 OHM,5%,0.25W	01121	CB5605
R1925	315-0202-00			RES.,FXD,CMPSN:2K OHM,5%,0.25W	01121	CB2025
R1926	321-0035-00	B010100	B010289	RES.,FXD,FILM:22.6 OHM,1%,0.125W	01121	CC-22R6-F
R1926	321-0038-00	B010290		RES.,FXD,FILM:24.3 OHM,1%,0.125W	91637	MFF1816G24R30F
R1940	311-1266-00			RES.,VAR,NONWIR:2.5K OHM,10%,0.50W	32997	3329P-L58-252
R1941	321-0393-00			RES.,FXD,FILM:121K OHM,1%,0.125W	91637	MFF1816G12102F
R1942	321-0283-00			RES.,FXD,FILM:8.66K OHM,1%,0.125W	91637	MFF1816G86600F
R1943	315-0201-00			RES.,FXD,CMPSN:200 OHM,5%,0.25W	01121	CB2015
R1944	321-0282-00			RES.,FXD,FILM:8.45K OHM,1%,0.125W	91637	MFF1816G84500F
R1945	315-0821-00			RES.,FXD,CMPSN:820 OHM,5%,0.25W	01121	CB8215
R1951	321-0421-00			RES.,FXD,FILM:237K OHM,1%,0.125W	91637	MFF1816G23702F
R1952	321-0692-00			RES.,FXD,FILM:49.9K OHM,0.5%,0.125W	91637	MFF1816G49901D
R1953	321-0306-00			RES.,FXD,FILM:15K OHM,1%,0.125W	91637	MFF1816G15001F
R1954	321-0314-00			RES.,FXD,FILM:18.2K OHM,1%,0.125W	91637	MFF1816G18201F
R1955	321-0314-00			RES.,FXD,FILM:18.2K OHM,1%,0.125W	91637	MFF1816G18201F
R1956	321-0289-00			RES.,FXD,FILM:10K OHM,1%,0.125W	91637	MFF1816G10001F

http://manoman.sqhill.com

Ckt No.	Tektronix Part No.	Serial/Model No. Eff	Dscont	Name & Description	Mfr Code	Mfr Part Number
R1957	321-0289-00			RES.,FXD,FILM:10K OHM,1%,0.125W	91637	MFF1816G10001F
R1958	315-0471-00			RES.,FXD,CMPSN:470 OHM,5%,0.25W	01121	CB4715
R1959	315-0103-00			RES.,FXD,CMPSN:10K OHM,5%,0.25W	01121	CB1035
R2006	315-0513-00			RES.,FXD,CMPSN:51K OHM,5%,0.25W	01121	CB5135
R2007	315-0513-00			RES.,FXD,CMPSN:51K OHM,5%,0.25W	01121	CB5135
R2013	301-0130-00			RES.,FXD,CMPSN:13 OHM,5%,0.50W	01121	EB1305
R2021	315-0100-00			RES.,FXD,CMPSN:10 OHM,5%,0.25W	01121	CB1005
R2023	315-0150-00			RES.,FXD,CMPSN:15 OHM,5%,0.25W	01121	CB1505
R2025	315-0150-00			RES.,FXD,CMPSN:15 OHM,5%,0.25W	01121	CB1505
R2041	321-0184-00			RES.,FXD,FILM:806 OHM,1%,0.125W	91637	MFF1816G806R0F
R2042	316-0682-00			RES.,FXD,CMPSN:6.8K OHM,10%,0.25W	01121	CB6821
R2043	315-0101-00			RES.,FXD,CMPSN:100 OHM,5%,0.25W	01121	CB1015
R2044	315-0182-00			RES.,FXD,CMPSN:1.8K OHM,5%,0.25W	01121	CB1825
R2045	315-0182-00			RES.,FXD,CMPSN:1.8K OHM,5%,0.25W	01121	CB1825
R2046	301-0181-00			RES.,FXD,CMPSN:180 OHM,5%,0.50W	01121	EB1815
R2047	321-0690-00			RES.,FXD,FILM:34K OHM,1%,0.125W	91637	MFF1816G34001D
R2048	311-1264-00			RES.,VAR,NONWIR:1.5K OHM,10%,0.50W	32997	3329P-L58-152
R2049	321-0779-03			RES.,FXD,FILM:7.02K OHM,0.25%,0.125W	91637	MFF1816D70200C
R2051	321-1331-02			RES.,FXD,FILM:27.2K OHM,0.5%,0.125W	91637	MFF1816D27701D
R2052	321-0669-00			RES.,FXD,FILM:6.08K OHM,0.5%,0.125W	91637	MFF1816D60800D
R2056	308-0446-00			RES.,FXD,WW:15 OHM,5%,5W	91637	RS2A-K15R00J
R2061	321-0775-03			RES.,FXD,FILM:45K OHM,0.25%,0.125W	91637	MFF1816D45001C
R2062	321-0260-01			RES.,FXD,FILM:4.99K OHM,0.5%,0.125W	91637	MFF1816G49900D
R2071	315-0472-00			RES.,FXD,CMPSN:4.7K OHM,5%,0.25W	01121	CB4725
R2072	315-0331-00			RES.,FXD,CMPSN:330 OHM,5%,0.25W	01121	CB3315
R2073	315-0102-00			RES.,FXD,CMPSN:1K OHM,5%,0.25W	01121	CB1025
R2074	321-0692-00			RES.,FXD,FILM:49.9K OHM,0.5%,0.125W	91637	MFF1816G49901D
R2075	321-0260-01			RES.,FXD,FILM:4.99K OHM,0.5%,0.125W	91637	MFF1816G49900D
R2083	315-0181-00			RES.,FXD,CMPSN:180 OHM,5%,0.25W	01121	CB1815
R2084	321-0769-03			RES.,FXD,FILM:50.33K OHM,0.25%,0.125W	91637	MFF1816D50331C
R2085	321-0285-01			RES.,FXD,FILM:9.09K OHM,0.5%0.125W	91637	MFF1816G90900D
R2086	316-0682-00			RES.,FXD,CMPSN:6.8K OHM,10%,0.25W	01121	CB6821
R2087	304-0390-00	B010100	B143849	RES.,FXD,CMPSN:39 OHM,10%,1W	01121	GB3901
R2087	303-0200-00	B143850		RES.,FXD,CMPSN:20 OHM,5%,1W	01121	GB2005
R2089	315-0395-00	B010100	B069999X	RES.,FXD,CMPSN:3.9M OHM,5%,0.25W	01121	CB3955
R2093	315-0390-00			RES.,FXD,CMPSN:39 OHM,5%,0.25W	01121	CB3905
R2094	307-0109-00			RES.,FXD,CMPSN:8.2 OHM,5%,0.25W	01121	CB82G5
R2096	323-0038-00			RES.,FXD,FILM:24.3 OHM,1%,0.50W	91637	MFF1226G24R30F
R2100	311-1223-00			RES.,VAR,NONWIR:250 OHM,10%,0.50W	32997	3386F-T04-251
R2101	315-0220-00			RES.,FXD,CMPSN:22 OHM,5%,0.25W	01121	CB2205
R2102	321-0021-00			RES.,FXD,FILM:16.2 OHM,1%,0.125W	19701	MF5C
R2105	311-1223-00			RES.,VAR,NONWIR:250 OHM,10%,0.50W	32997	3386F-T04-251
R2106	315-0201-00			RES.,FXD,CMPSN:200 OHM,5%,0.25W	01121	CB2015
R2107	321-0698-00			RES.,FXD,FILM:1.89K OHM,0.25%,0.125W	91637	MFF1816C18900C
R2108	321-0249-09			RES.,FXD,FILM:3.83K OHM,1%,0.125W	91637	MFF1816C38300F
R2109	321-0321-07			RES.,FXD,FILM:21.5K OHM,0.1%,0.125W	91637	MFF1816C21501B
R2111	315-0221-00			RES.,FXD,CMPSN:220 OHM,5%,0.25W	01121	CB2215
R2112	321-0321-07			RES.,FXD,FILM:21.5K OHM,0.1%,0.125W	91637	MFF1816C21501B
R2113	316-0152-00			RES.,FXD,CMPSN:1.5K OHM,10%,0.25W	01121	CB1521
R2116	321-0102-00			RES.,FXD,FILM:113 OHM,1%,0.125W	91637	MFF1816G113R0F
R2117	315-0150-00			RES.,FXD,CMPSN:15 OHM,5%,0.25W	01121	CB1505
R2120	317-0181-00			RES.,FXD,CMPSN:180 OHM,5%,0.125W	01121	BB1815
R2122	317-0271-00			RES.,FXD,CMPSN:270 OHM,5%,0.125W	01121	BB2715

http://manoman.sqhill.com

Ckt No.	Tektronix Part No.	Serial/Model No. Eff	Dscont	Name & Description	Mfr Code	Mfr Part Number
R2124	317-0430-00			RES.,FXD,CMPSN:43 OHM,5%,0.125W	01121	BB4305
R2130	311-1223-00			RES.,VAR,NONWIR:250 OHM,10%,0.50W	32997	3386F-T04-251
R2131	323-0225-09			RES.,FXD,FILM:17.8 OHM,1%,0.50W	91637	MFF1226C21500F
R2132	323-0225-09			RES.,FXD,FILM:17.8 OHM,1%,0.50W	91637	MFF1226C21500F
R2133	321-0255-00			RES.,FXD,FILM:4.42K OHM,1%,0.125W	91637	MFF1816G44200F
R2134	321-0961-07			RES.,FXD,FILM:500.5 OHM,0.1%,0.125W	91637	MFF1816C500R5B
R2139	315-0100-00			RES.,FXD,CMPSN:10 OHM,5%,0.25W	01121	CB1005
RT551	307-0127-00			RES.,THERMAL:1K OHM,10%	50157	2D1596
RT644	307-0126-00			RES.,THERMAL:100 OHM,10%	14193	2D21-101K
RT1487	307-0124-00			RES.,THERMAL:5K OHM,10%	50157	1D1618
RT1821	307-0353-00			RES.,FXD,FILM:5 OHM,10%,DISC	15454	5DA5RO-K-270SS
RT1822	307-0353-00			RES.,FXD,FILM:5 OHM,10%,DISC	15454	5DA5RO-K-270SS
S15[1]				COUPLING		
S90[2]				SWITCH,CAM:CAL IN		
S95[1]				SWITCH,CAM:VOLTS/DIV		
S125A[3]	260-1314-00			SWITCH,PUSH:1 BUTTON,50 OHM/1M OHM	80009	260-1314-00
S125B						
S125[4]	260-1492-00			SWITCH,PUSH:RESET	80009	260-1492-00
S310	260-0816-01			SWITCH,SLIDE:DPDT,0.5A,125V	80009	260-0816-01
S600	260-1315-00			SWITCH,PUSH:BEAM FINDER	71590	2KBM020000-529
S630				BW LIMIT		
S700	260-1395-00			SWITCH,ROTARY:A SOURCE	82104	260-1395-00
S705	260-1312-00			SWITCH,LEVER:1 SECT,4 POSN,22.5 DEG	80009	260-1312-00
S710[5]	260-0735-00			SWITCH,PUSH:SPST	81073	39-1
S720[6]				SWITCH,PUSH:SLOPE		
S780	260-1313-00			SWITCH,LEVER:1 SECT,4 POSN22.5 DEG	80009	260-1313-00
S898[7]						
S1000A,B	260-1311-00			SWITCH,LEVER:1 SECT,4 POSN,22.5 DEG	80009	260-1311-00
S1005	260-1312-00			SWITCH,LEVER:1 SECT,4 POSN,22.5 DEG	80009	260-1312-00
S1020[8]				LEVEL SLOPE		
S1400[1]				CAL IN		
S1420	105-0281-00	B010100	B049999	DRUM ASSY,CAM S:A TIME/DIV AND DELAY TIME	80009	105-0281-00
S1420	105-0470-00	B050000		DRUM ASSY,CAM S:A B TIME/DIV AND A DELAY TIME	80009	105-0470-00
S1460	105-0335-00	B010100	B049999	DRUM ASSY,CAM S:B TIME/DIV	80009	105-0335-00
S1460	105-0470-00	B050000		DRUM ASSY,CAM S:A B TIME/DIV AND A DELAY TIME	80009	105-0470-00
S1500	260-1318-00			SWITCH,PUSH:4 BUTTON,2 POLE,INTERLOCK	80009	260-1318-00
S1580	260-1319-00			SWITCH,PUSH:6 BUTTON,INTERLOCK	80009	260-1319-00
S1590	260-1317-00			SWITCH,PUSH:3 BUTTON,2 POLE,INTERLOCK	80009	260-1317-00
S1801	260-1368-01			SWITCH,SENS:SPST,15A,250VAC	89265	A1-M1-3G1-6-33
S1802	260-0638-00			SW,THERMOSTATIC:10A,240V,OPEN 75 DEG C	93410	110-364
S1803	260-1300-00			SWITCH,SLIDE:	82389	46206LFE
S2105	260-1208-00			SWITCH,PUSH:DPDT	80009	260-1208-00
T205	276-0614-00			CORE,FERRITE:	80009	276-0614-00
T305	276-0614-00			CORE,FERRITE:	80009	276-0614-00
T719	120-0797-00			XFMR,TOROID:	80009	120-0797-00
T1015	120-0797-00			XFMR,TOROID:	80009	120-0797-00
T1801	120-0716-00			XFMR,PWR,STPDN:LINE TRIGGER	80009	120-0716-00
T1825	120-0640-00			XFMR,TOROID:	80009	120-0640-00
T1831	120-0788-00			XFMR,TOROID:4 WINDINGS	80009	120-0788-00
T1848	120-0747-00			XFMR,TOROID:55 TURNS,SINGLE	80009	120-0747-00
T1960	120-0787-00			XFMR,PWR,SDN:	80009	120-0787-00
U48[3]	156-0105-00			MICROCIRCUIT,LI:OPERATIONAL AMPLIFIER	27014	LM301AN

[1] See Mechanical Parts List for replacement parts.
[2] Furnished as a unit with R90.
[3] 485, 485-1 only.
[4] 485-2 only.
[5] 485 only.
[6] Furnished as a unit with R720.
[7] Furnished as a unit with R898.
[8] Furnished as a unit with R1020.

http://manoman.sqhill.com

Ckt No.	Tektronix Part No.	Serial/Model No. Eff	Dscont	Name & Description	Mfr Code	Mfr Part Number
U80	155-0076-00			MICROCIRCUIT,LI:ML,INPUT PROTECTION	80009	155-0076-00
U210	155-0078-00	B010100	B143429	MICROCIRCUIT,LI:ML,VERT AMPL	80009	155-0078-00
U210	155-0078-10	B143430		MICROCIRCUIT,LI:ML,VERT AMPL,SEL	80009	155-0078-10
U250	155-0078-03	B010100	B144129	MICROCIRCUIT,LI:ML,VERTICAL AMPL,SEL	80009	155-0078-03
U250	155-0078-13	B144130		MICROCIRCUIT,LI:ML,VERTICAL AMPL,SEL	80009	155-0078-13
U310	155-0078-00	B010100	B143429	MICROCIRCUIT,LI:ML,VERT AMPL	80009	155-0078-00
U310	155-0078-10	B143430		MICROCIRCUIT,LI:ML,VERT AMPL,SEL	80009	155-0078-10
U332	156-0067-00			MICROCIRCUIT,LI:OPERATIONAL AMPLIFIER	80009	156-0067-00
U350	155-0078-03	B010100	B144129	MICROCIRCUIT,LI:ML,VERTICAL AMPL,SEL	80009	155-0078-03
U350	155-0078-13	B144130		MICROCIRCUIT,LI:ML,VERTICAL AMPL,SEL	80009	155-0078-13
U410	155-0078-01	B010100	B143429	MICROCIRCUIT,LI:ML,VERT AMPL,SEL	80009	155-0078-01
U410	155-0078-11	B143430		MICROCIRCUIT,LI:ML,VERT AMPL,SEL	80009	155-0078-11
U430	155-0078-01	B010100	B143429	MICROCIRCUIT,LI:ML,VERT AMPL,SEL	80009	155-0078-01
U430	155-0078-11	B143430		MICROCIRCUIT,LI:ML,VERT AMPL,SEL	80009	155-0078-11
U510	155-0078-01	B010100	B143429	MICROCIRCUIT,LI:ML,VERT AMPL,SEL	80009	155-0078-01
U510	155-0078-11	B143430		MICROCIRCUIT,LI:ML,VERT AMPL,SEL	80009	155-0078-11
U530	155-0078-01	B010100	B143429	MICROCIRCUIT,LI:ML,VERT AMPL,SEL	80009	155-0078-01
U530	155-0078-11	B143430		MICROCIRCUIT,LI:ML,VERT AMPL,SEL	80009	155-0078-11
U620	155-0078-01	B010100	B143429	MICROCIRCUIT,LI:ML,VERT AMPL,SEL	80009	155-0078-01
U620	155-0078-11	B143430		MICROCIRCUIT,LI:ML,VERT AMPL,SEL	80009	155-0078-11
U650	155-0078-02	B010100	B143429	MICROCIRCUIT,LI:ML,VERT AMPL,SELECTED	80009	155-0078-02
U650	155-0078-03	B143430	B144129	MICROCIRCUIT,LI:ML,VERTICAL AMPL,SEL	80009	155-0078-03
U650	155-0078-12	B144130		MICROCIRCUIT,LI:VERTICAL AMPLIFIER,SEL	80009	155-0078-12
U660	155-0064-00			MICROCIRCUIT,LI:OUTPUT AMPLIFIER	80009	155-0064-00
U730	155-0078-02	B010100	B143429	MICROCIRCUIT,LI:ML,VERT AMPL,SELECTED	80009	155-0078-02
U730	155-0078-03	B143430		MICROCIRCUIT,LI:ML,VERTICAL AMPL,SEL	80009	155-0078-03
U738	155-0078-02	B010100	B143429	MICROCIRCUIT,LI:ML,VERT AMPL,SELECTED	80009	155-0078-02
U738	155-0078-03	B143430		MICROCIRCUIT,LI:ML,VERTICAL AMPL,SEL	80009	155-0078-03
U740	155-0078-02	B010100	B143429	MICROCIRCUIT,LI:ML,VERT AMPL,SELECTED	80009	155-0078-02
U740	155-0078-03	B143430		MICROCIRCUIT,LI:ML,VERTICAL AMPL,SEL	80009	155-0078-03
U780	155-0049-00	B010100	B049999	MICROCIRCUIT,DI:SWEEP CONTROL	80009	155-0049-00
U780	155-0049-01	B050000	B144849	MICROCIRCUIT,DI:MONOLITHIC,SWEEP CONTROL	80009	155-0049-01
U780	155-0049-02	B144850		MICROCIRCUIT,DI:SWEEP CONTROL,W/LOCKOUT	80009	155-0049-02
U830	155-0078-02	B010100	B143429	MICROCIRCUIT,LI:ML,VERT AMPL,SELECTED	80009	155-0078-02
U830	155-0078-03	B143430		MICROCIRCUIT,LI:ML,VERTICAL AMPL,SEL	80009	155-0078-03
U910	156-0067-02	B010100	B149999	MICROCIRCUIT,LI:OPNL AMPLIFIER,SELECTED	80009	156-0067-02
U910	156-0067-00	B150000		MICROCIRCUIT,LI:OPERATIONAL AMPLIFIER	80009	156-0067-00
U960	156-0067-00			MICROCIRCUIT,LI:OPERATIONAL AMPLIFIER	80009	156-0067-00
U1030	155-0078-02	B010100	B143429	MICROCIRCUIT,LI:ML,VERT AMPL,SELECTED	80009	155-0078-02
U1030	155-0078-03	B143430		MICROCIRCUIT,LI:ML,VERTICAL AMPL,SEL	80009	155-0078-03
U1038	155-0078-02	B010100	B143429	MICROCIRCUIT,LI:ML,VERT AMPL,SELECTED	80009	155-0078-02
U1038	155-0078-03	B143430		MICROCIRCUIT,LI:ML,VERTICAL AMPL,SEL	80009	155-0078-03
U1040	155-0078-02	B010100	B143429	MICROCIRCUIT,LI:ML,VERT AMPL,SELECTED	80009	155-0078-02
U1040	155-0078-03	B143430		MICROCIRCUIT,LI:ML,VERTICAL AMPL,SEL	80009	155-0078-03
U1480	156-0281-00			MICROCIRCUIT,LI:4 TRANSISTOR ARRAY	80009	156-0281-00
U1530	156-0047-00			MICROCIRCUIT,DI:TPL 3-INPUT POS NAND GATE	80009	156-0047-00
U1535	156-0041-00			MICROCIRCUIT,DI:DUAL D-TYPE FLIP-FLOP	27014	DM7474N
U1560	155-0012-00			MICROCIRCUIT,LI:ML,Z-AXIS AND AMPLIFIER	80009	155-0012-00
U1580	156-0030-00			MICROCIRCUIT,DI:QUAD 2-INPUT POS NAND GATE	01295	SN7400N
U1585	155-0011-00			MICROCIRCUIT,DI:ML,CLOCK AND CHOP BLANKING	80009	155-0011-00
U1600	152-0509-00			SEMICOND DEVICE:V MULTR,3KV IN,18KV OUT	80009	152-0509-00
U1624	156-0067-00			MICROCIRCUIT,LI:OPERATIONAL AMPLIFIER	80009	156-0067-00
U1710	155-0012-00			MICROCIRCUIT,LI:ML,Z-AXIS AND AMPLIFIER	80009	155-0012-00

http://manoman.sqhill.com

Ckt No.	Tektronix Part No.	Serial/Model No. Eff	Dscont	Name & Description	Mfr Code	Mfr Part Number
U1910	155-0067-02			MICROCIRCUIT,DI:ML,POWER SUPPLY REGULATOR	80009	155-0067-02
U2042	156-0067-00			MICROCIRCUIT,LI:OPERATIONAL AMPLIFIER	80009	156-0067-00
U2052	156-0067-00			MICROCIRCUIT,LI:OPERATIONAL AMPLIFIER	80009	156-0067-00
U2062	156-0067-00			MICROCIRCUIT,LI:OPERATIONAL AMPLIFIER	80009	156-0067-00
U2072	156-0067-00			MICROCIRCUIT,LI:OPERATIONAL AMPLIFIER	80009	156-0067-00
U2086	156-0067-00			MICROCIRCUIT,LI:OPERATIONAL AMPLIFIER	80009	156-0067-00
V1700	154-0652-00	B010100	B091499	ELECTRON TUBE:CRT	80009	154-0652-00
V1700	154-0652-05	B091500		ELECTRON,TUBE:CRT	80009	154-0652-05
VR71[1]	152-0395-00			SEMICOND DEVICE:ZENER,0.4W,4.3V,5%	04713	1N749A
VR838[2]	152-0127-00			SEMICOND DEVICE:ZENER,0.4W,7.5V,5%	04713	1N958B
VR839[2]	152-0127-00			SEMICOND DEVICE:ZENER,0.4W,7.5V,5%	04713	1N958B
VR844	152-0175-00			SEMICOND DEVICE:ZENER,0.4W,5.6V,5%	80009	152-0175-00
VR1131	152-0175-00			SEMICOND DEVICE:ZENER,0.4W,5.6V,5%	80009	152-0175-00
VR1549	152-0243-00			SEMICOND DEVICE:ZENER,0.4W,15V,5%	80009	152-0243-00
VR1740	152-0280-00			SEMICOND DEVICE:ZENER,0.4W,6.2V,5%	80009	152-0280-00
VR1831	152-0401-00			SEMICOND DEVICE:SILICON,3-LAYER,TRIGGER	04713	1N5761
VR1846	152-0287-00	B010100	B143554	SEMICOND DEVICE:ZENER,0.4W,110V,5%	04713	1N986B
VR1846	152-0657-00	B143555		SEMICOND DEVICE:ZENER,0.4W,108V,2%	04713	SZG20107
VR1912	152-0288-00			SEMICOND DEVICE:ZENER,0.4W,140V,5%	80009	152-0288-00
VR1928	152-0243-00	B010100	B029999	SEMICOND DEVICE:ZENER,0.4W,15V,5%	80009	152-0243-00
VR1928	152-0304-00	B030000		SEMICOND DEVICE:ZENER,0.4W,20V,5%	04713	1N968B
VR1945	152-0212-00			SEMICOND DEVICE:ZENER,0.5W,9V,5%	80009	152-0212-00
VR2042	152-0411-00			SEMICOND DEVICE:ZENER,0.25W,9V,5%	04713	1N937
VR2043	152-0283-00			SEMICOND DEVICE:ZENER,0.4W,43V,5%	04713	1N976B

[1] 485, 485-1 only
[2] 485 only

http://manoman.sqhill.com

DIAGRAMS AND CIRCUIT BOARD ILLUSTRATIONS

Symbols and Reference Designators

Electrical components shown on the diagrams are in the following units unless noted otherwise:

Capacitors = Values one or greater are in picofarads (pF).
Values less than one are in microfarads (μF).
Resistors = Ohms (Ω)

Symbols used on the diagrams are based on USA Standard Y32.2-1967.

Logic symbology is based on MIL-STD-806B in terms of positive logic. Logic symbols depict the logic function performed and may differ from the manufacturer's data.

The following special symbols are used on the diagrams:

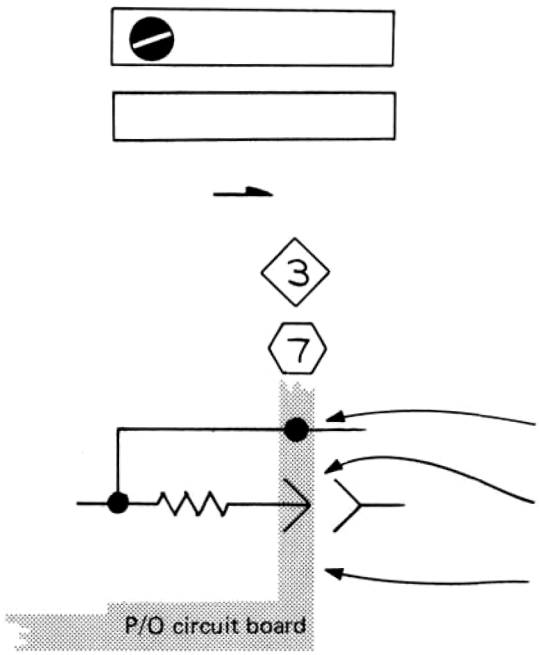

External Screwdriver adjustment.

External control or connector.

Clockwise control rotation in direction of arrow.

Refer to diagram number indicated in diamond.

Refer to waveform number indicated in hexagon.

Connection soldered to circuit board.

Connection made to circuit board with interconnecting pin.

Blue tint encloses components located on circuit board.

The following prefix letters are used as reference designators to identify components or assemblies on the diagrams.

A	Assembly, separable or repairable (circuit board, etc.)
AT	Attenuator, fixed or variable
B	Motor
BT	Battery
C	Capacitor, fixed or variable
CR	Diode, signal or rectifier
DL	Delay line
DS	Indicating device (lamp)
F	Fuse
FL	Filter
H	Heat dissipating device (heat sink, heat radiator, etc.)
HR	Heater
J	Connector, stationary portion
K	Relay
L	Inductor, fixed or variable
LR	Inductor/resistor combination
M	Meter
Q	Transistor or silicon-controlled rectifier
P	Connector, movable portion
R	Resistor, fixed or variable
RT	Thermistor
S	Switch
T	Transformer
TP	Test point
U	Assembly, inseparable or non-repairable (integrated circuit, etc.)
V	Electron tube
VR	Voltage regulator (zener diode, etc.)
Y	Crystal

http://manoman.sqhill.com

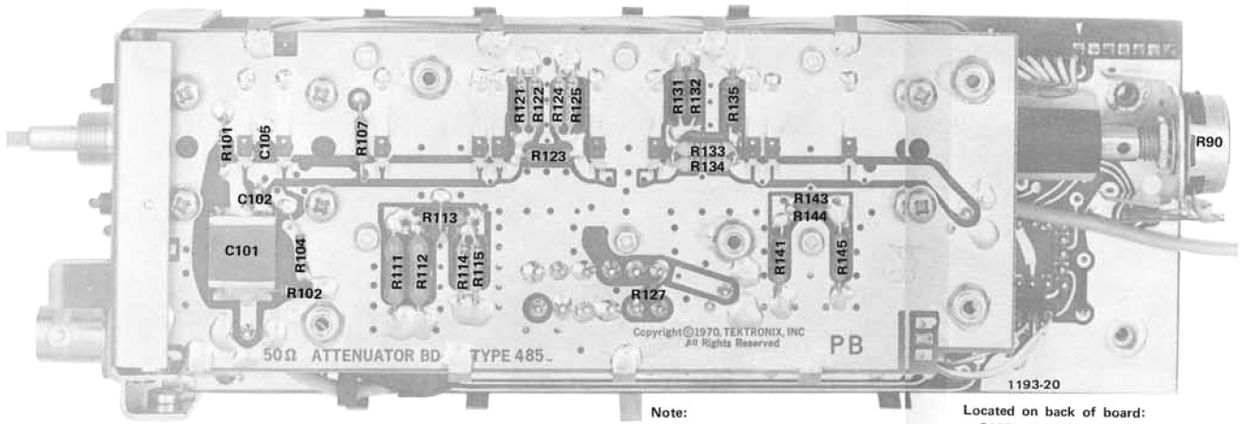

Note:
R127 not used on A6 board.

Located on back of board:
S125
C104

Fig. 8-1. A5 & A6 50 Ω Attenuator board.

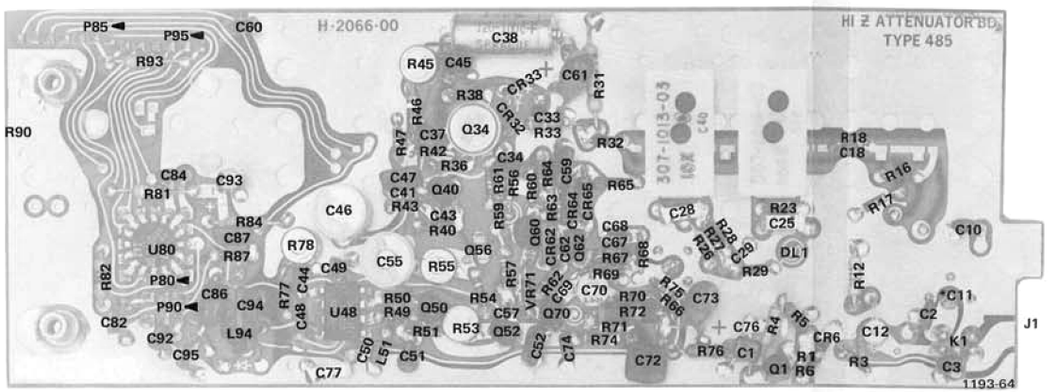

*See Parts List for serial number ranges.

Fig. 8-2A. A3 Hi Z Attenuator board (485 & 485-1 only) SN B155790-up.

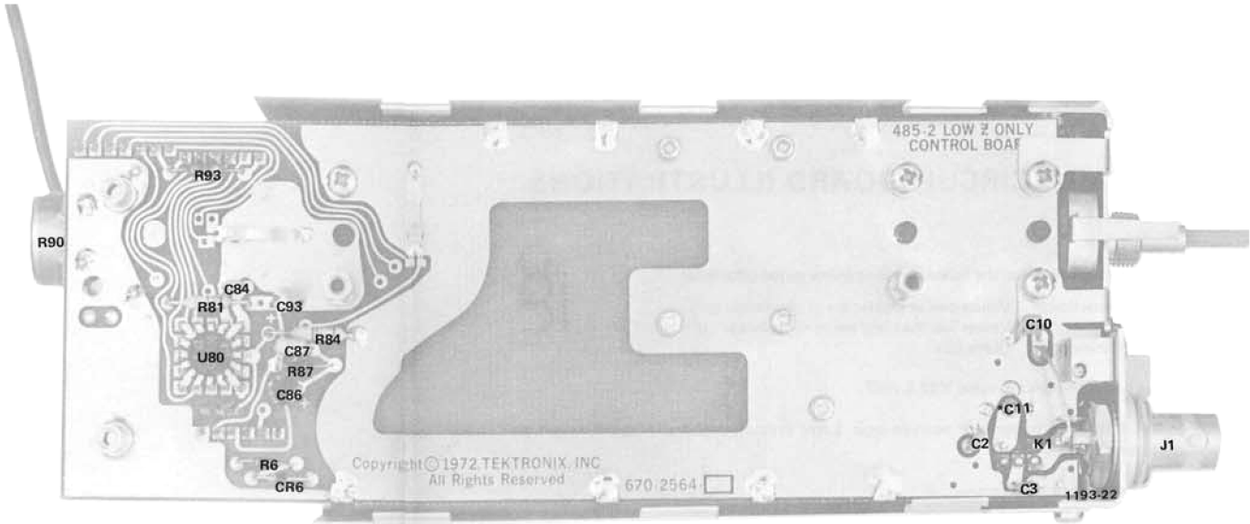

*See Parts List for serial number ranges.

Fig. 8-2C. A4 Low Z Control board (485-2 only).

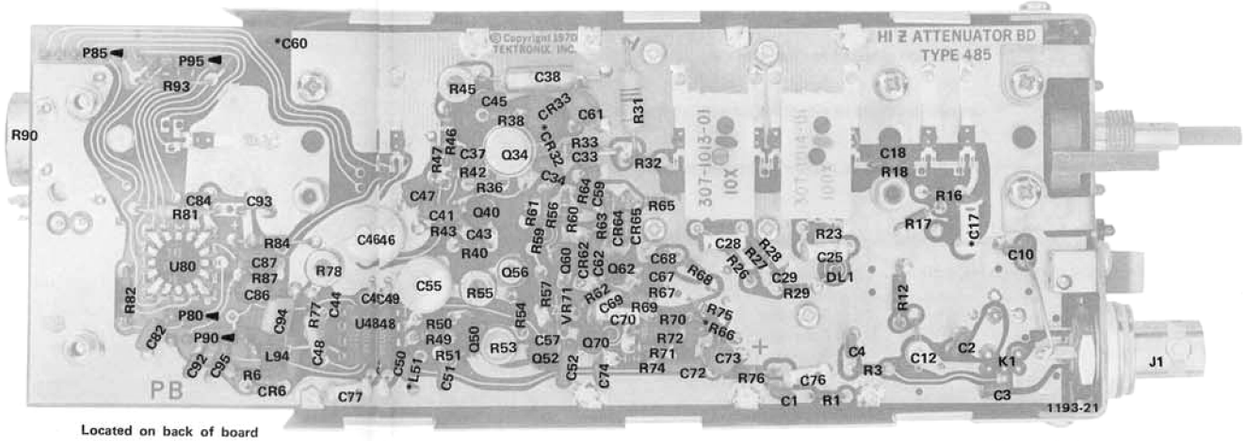

Located on back of board
C16 P80 P85
R14 P90 P95

*See Part List for serial number ranges.

Fig. 8-2B. A, A3 Hi Z Attenuator board (485 & 485-1 only) SN B010100-B155789.

http://manoman.sqhill.com

VOLTAGE CONDITIONS
VOLTS/DIV–20 mV
INPUT–GND
INPUT IMPEDANCE–50 Ω
INT TRIG–NORM
SWEEP MODE–AUTO TRIG
HORIZONTAL DISPLAY–A
TIME/DIV–1 ms
VERTICAL POSITIONING–

PARTIAL 50Ω ATTENUATOR BOARD A5

VERTICAL SIGNAL TO VERT PREAMP ②

TO P90-3 … TO U80-12
EFF. SN B15589 & BELOW

FROM ⑮

P1560-6 (CH 1) / P1560-7 (CH 2) +15V (DCPL)
P1560-4 (CH 1) / P1560-3 (CH 2) +9V
P1570-10 (CH 1) / P1570-9 (CH 2) +5V
P1570-7 (CH 1) / P1570-6 (CH 2)
P1570-5 (CH 1) / P1570-4 (CH 2) -5V
P1570-3 (CH 1) / P1570-2 (CH 2) -9V

CH 1 VOLTS/DIV S95 SWITCH SHOWN IN 5mv POSITION

X1 PROBE: 5 10 20 50 100 200 500 mV
X10 PROBE: 50 mV 100 200 500 1 2 5 V
X100 PROBE: .5 1 2 5 10 20 50 V

TO L266 CH 1, L366 CH 2 ②
TO L262 CH 1, L362 CH 2
TO L511 CH 1, L531 CH 2 ④
TO R220 CH 1, R230 CH 2 ②
TO R225 CH 1, R325 CH 2 ②
SWITCHED GND FROM VERT MODE S1580 ⑫

SEE PARTS LIST FOR EARLIER VALUES AND SERIAL NUMBER RANGES OF PARTS OUTLINED OR DEPICTED IN BLUE.

NOTE:
* PART OF ETCHED CIRCUIT BOARD

HI Z ATTENUATOR BOARD A3

TRACE IDENT TO R289 CH 1 R389 CH 2 ②

485 OSCILLOSCOPE

1193-23
REV H, MAR 1979

CH 1 ATTENUATORS (HI Z) ①
(CH 2 IDENTICAL)

http://manoman.sqhill.com

VOLTAGE CONDITIONS
VOLTS/DIV–20 mV
INPUT–GND
INPUT IMPEDANCE–50 Ω
INT TRIG–NORM
SWEEP MODE–AUTO TRIG
HORIZONTAL DISPLAY–A
TIME/DIV–1 ms
VERTICAL POSITIONING–

PARTIAL 50Ω ATTENUATOR BOARD A5

VERTICAL SIGNAL TO VERT PREAMP (2)

CAM SIDE

CH 1 VOLTS/DIV S95 SWITCH SHOWN IN 5mv POSITION

X1 PROBE / X10 PROBE / X100 PROBE

TO L266 CH 1, L366 CH 2 (2)
TO L262 CH 1, L362 CH 2
TO L511 CH 1, L531 CH 2 (4)
TO R220 CH 1, R230 CH 2 (2)
TO R225 CH 1, R325 CH 2 (2)

SWITCHED GND FROM VERT MODE S1580 (12)

SEE PARTS LIST FOR EARLIER VALUES AND SERIAL NUMBER RANGES OF PARTS OUTLINED OR DEPICTED IN BLUE.

A4 LO Z ATTENUATOR BOARD

PARTIAL 50Ω BOARD

*R83 MAY BE CONNECTED TO EITHER +5V OR -5V

FROM (15)

TRACE IDENT TO R289 CH1 R389 CH2 (2)

CH 1 ATTENUATORS (LO Z) (1)
(CH 2 IDENTICAL)

485 OSCILLOSCOPE

1193-63
@, MAR 1979

http://manoman.sqhill.com

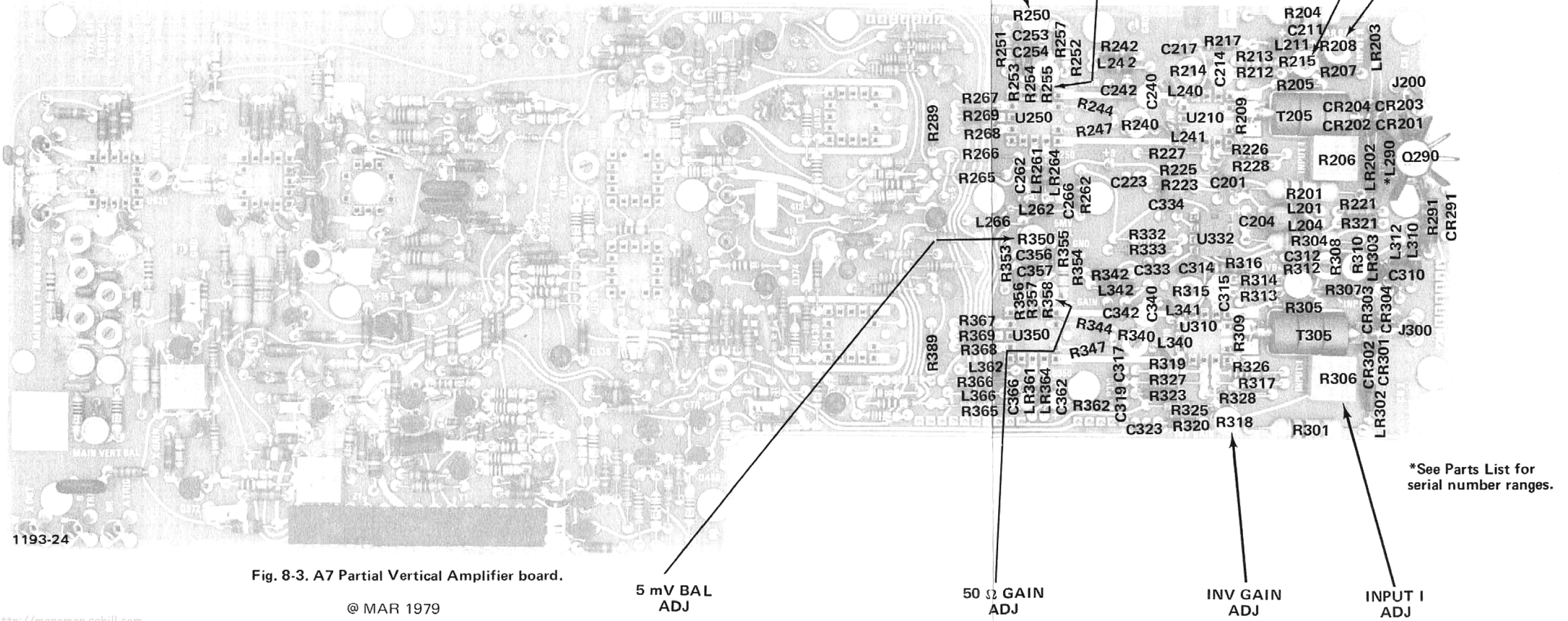

*See Parts List for serial number ranges.

1193-24

Fig. 8-3. A7 Partial Vertical Amplifier board.

http://manoman.sqhill.com

PARTIAL A3 CH1 HI Z ATTEN BD

PARTIAL AT VERTICAL BOARD

CH1 SIGNAL FROM S95 ①

CH1 GAIN

CH1 VARIABLE

CH1 VOLTS/DIV

CH1 INPUT I

CH1 INPUT Z

CH1 VAR BAL

CH1 5mV BAL

CH1 GAIN

SCALE ILLUM

FROM P2040-1 (LAMPS) ⑮

CH1 +VERT SIGNAL TO PIN 13, U410 ③

CH1 -VERT SIGNAL TO PIN 1, U410 ③

CH1 TRACE IDENT FROM PIN 7, U80

PARTIAL A3 CH1 HI Z ATTEN BD ①

SEE PARTS LIST FOR EARLIER VALUES AND SERIAL NUMBER RANGES OF PARTS OUTLINED OR DEPICTED IN BLUE.

U210

U250

U332 μA741C

PARTIAL CH2 HI Z ATTEN BD

CH2 GAIN

CH2 VARIABLE

CH2 VOLTS/DIV

CH2 POLARITY

CH2 INPUT I

CH2 INPUT Z

INVERTED VAR BAL

NORM VAR BAL

CH2 5mV BAL

CH2 GAIN

CH2 SIGNAL FROM S95 ①

CH2 +VERT SIGNAL TO PIN 13, U430 ③

CH2 -VERT SIGNAL TO PIN 1, U430 ③

CH2 TRACE IDENT FROM PIN 7 U80 ①

PARTIAL A3 CH2 HI Z ATTEN BD ①

PARTIAL A7 VERTICAL BOARD

U310

U350

VOLTAGE CONDITIONS

VOLTS/DIV –10 mV
INPUT – CHAN 1
INPUT IMPEDANCE – 50 Ω
INT TRIG – NORM
SWEEP MODE – ALT
HORIZONTAL DISPLAY – A
TIME/DIV – 1 ms
VERTICAL POSITIONING – center screen

+6.2 nS DELAY RESPECT TO FRONT PANEL J-1

7.2 nS DELAY

7.2 nS DELAY RESPECT TO FRONT PANEL

* PART OF E.C. BOARD
⏚ SUBSTRATE
** MATCHED SET
≠ ON UNDER SIDE OF BOARD
1193-25
REV. E, MAR 1977

485 OSCILLOSCOPE

CH 1 & CH 2 VERTICAL PREAMPS ②

EKP

http://manoman.sqhill.com

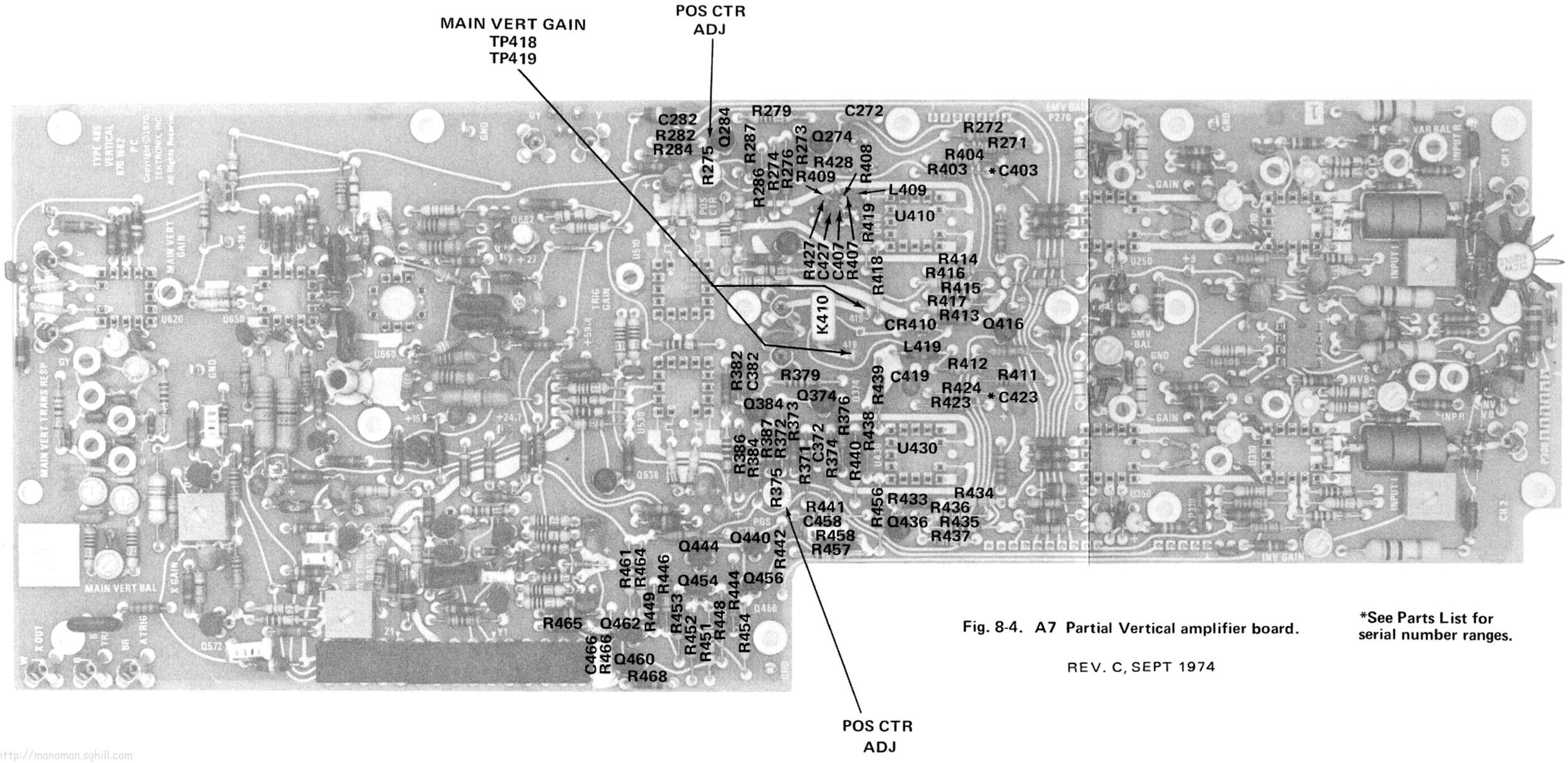

Fig. 8-4. A7 Partial Vertical amplifier board.

*See Parts List for serial number ranges.

REV. C, SEPT 1974

http://manoman.sghill.com

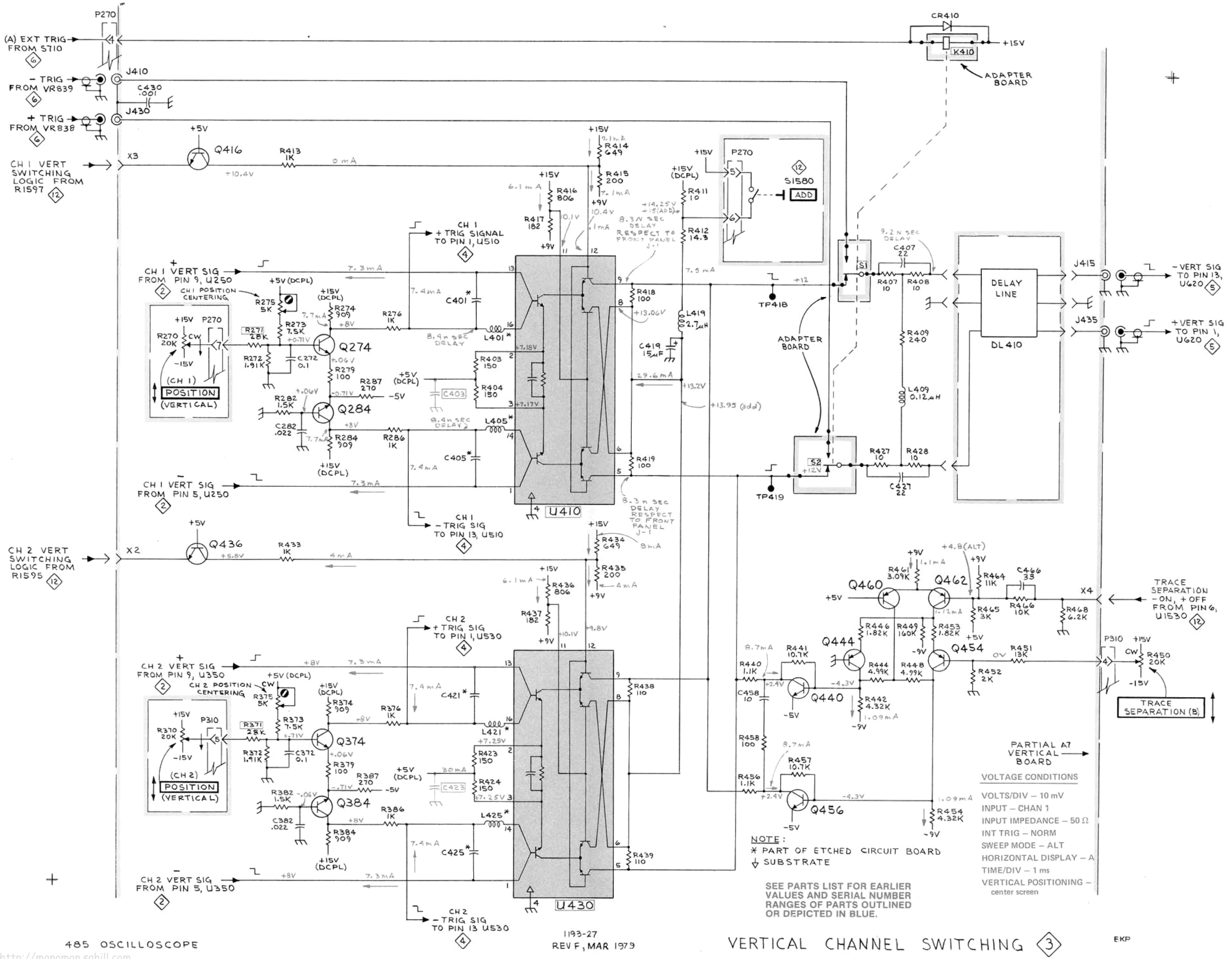

485 OSCILLOSCOPE

1193-27
REV F, MAR 1979

VERTICAL CHANNEL SWITCHING ◇3

EKP

http://manoman.sqhill.com

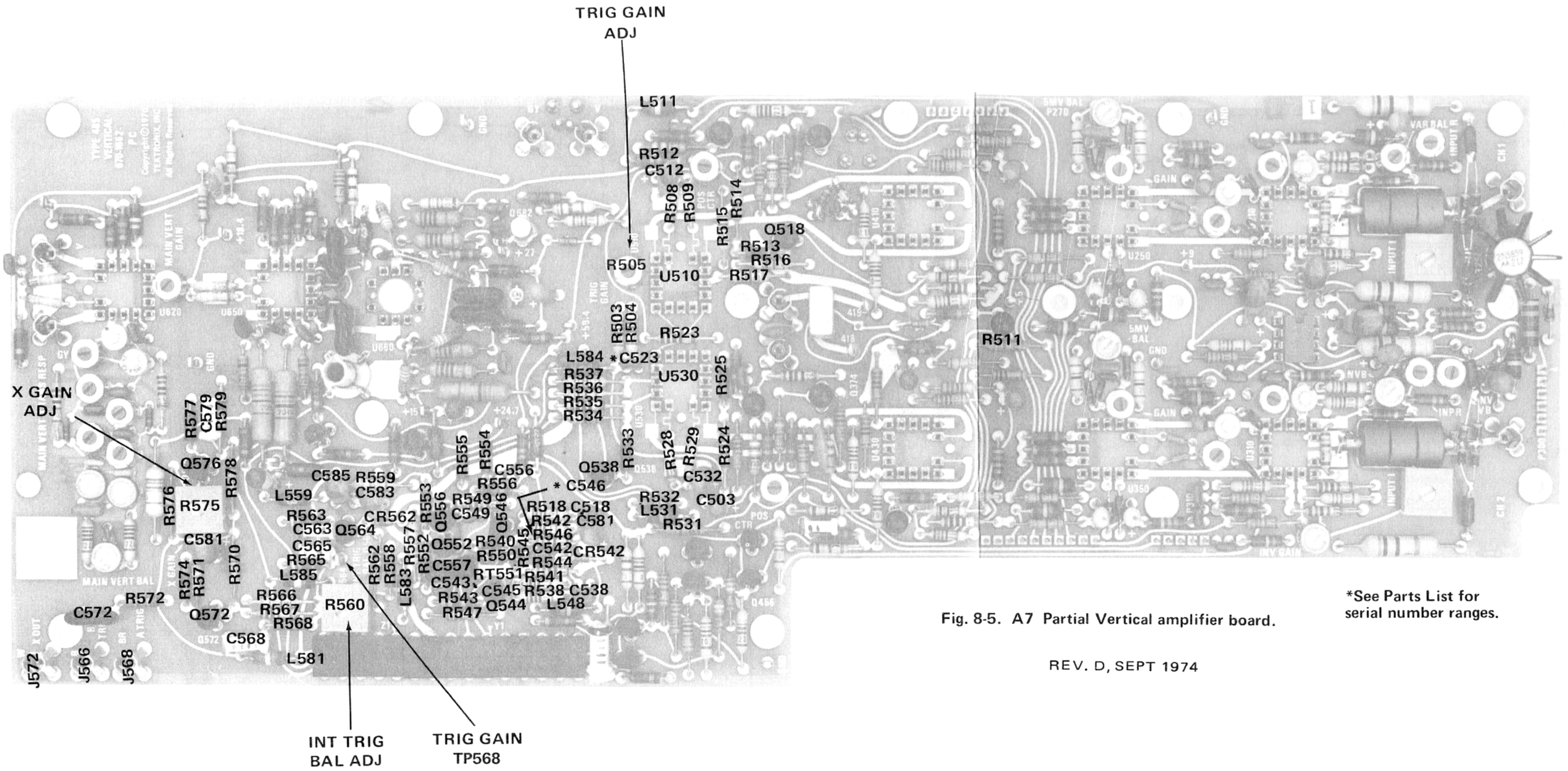

Fig. 8-5. A7 Partial Vertical amplifier board.

*See Parts List for serial number ranges.

REV. D, SEPT 1974

http://manoman.sqhill.com

SEE PARTS LIST FOR EARLIER VALUES AND SERIAL NUMBER RANGES OF PARTS OUTLINED OR DEPICTED IN BLUE.

CH 1 TRIG LOGIC FROM R1598 (12)

CH 2 TRIG LOGIC FROM R1599 (12)

CH 1 + TRIG SIG FROM PIN 16, U410 (3)

CH 1 - TRIG SIG FROM PIN 14, U410 (3)

CH 2 + TRIG SIG FROM PIN 16, U430 (3)

CH 2 - TRIG SIG FROM PIN 14, U430 (3)

(1) (CH 1) S95 VOLTS/DIV — 25 — P85 — Q10 — CLOSED IN 5 mV POS

(1) (CH 2) S95 VOLTS/DIV — 25 — P85 — Q10 — CLOSED IN 5 mV POS

10 mS DELAY WITH RESPECT TO FRONT PANEL J1

11.6 μ SEC DELAY RESPECT TO FRONT PANEL J1

J572 X-Y SIG TO (11)

J566 'B' INT TRIG TO S1000 (6)

J568 'A' INT TRIG TO S700 (6)

TP568

(FULL) FROM S630 (5)

(20 MHz) FROM S630 (5)

VOLTAGE CONDITIONS

VOLTS/DIV – 10 mV
INPUT – CHAN 1
INPUT IMPEDANCE – 50 Ω
INT TRIG – NORM
SWEEP MODE – ALT
HORIZONTAL DISPLAY – A
TIME/DIV – 1 ms
VERTICAL POSITIONING – center screen

NOTE:
* PART OF ETCHED CIRCUIT BOARD
▽ SUBSTRATE

PARTIAL A7 VERTICAL BOARD

485 OSCILLOSCOPE

1193-29
REV. E, MAR. 1978

TRIGGER AMPLIFIER & SWITCHING (4)

EKP

http://manoman.sqhill.com

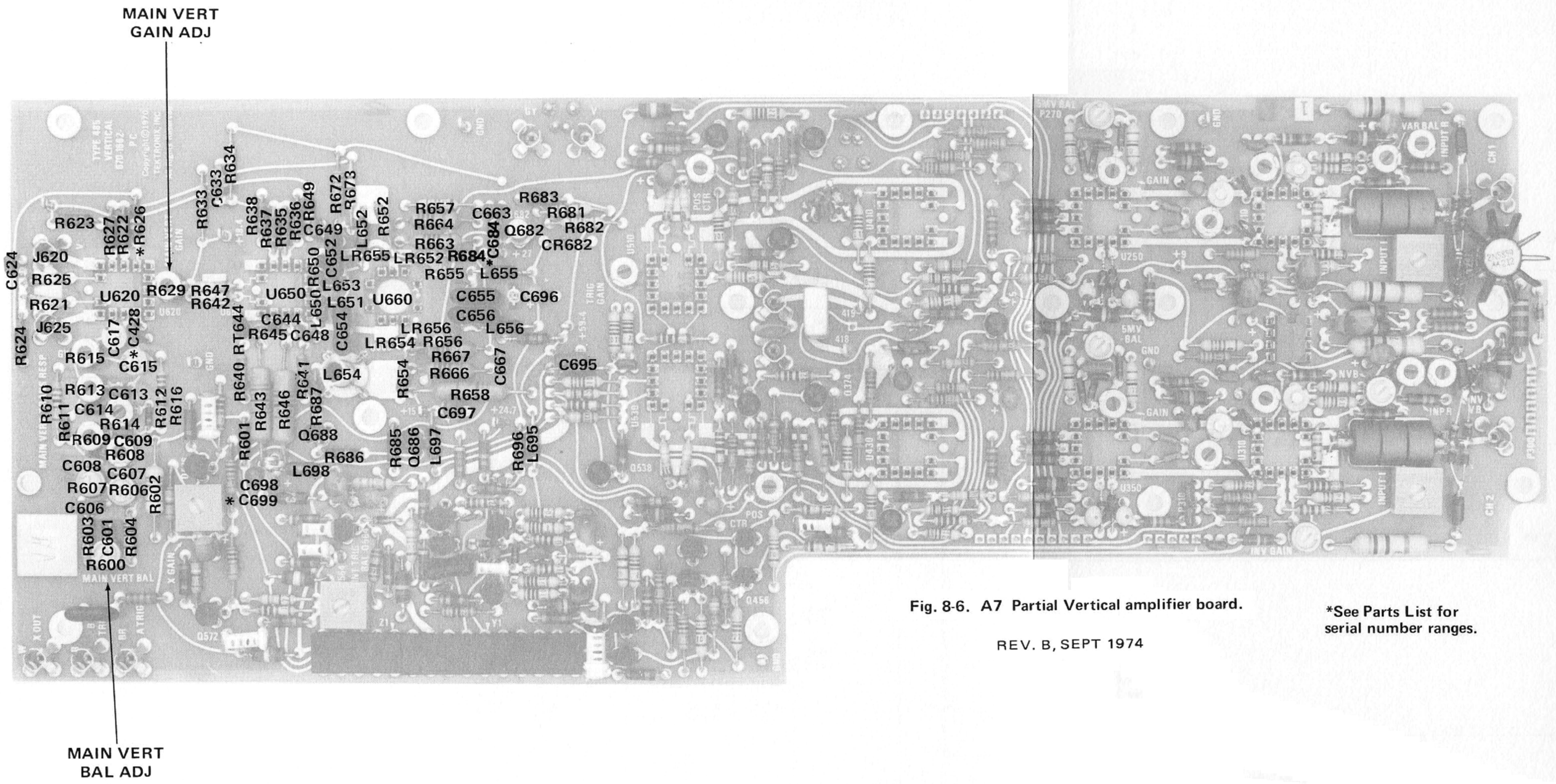

Fig. 8-6. A7 Partial Vertical amplifier board.

REV. B, SEPT 1974

*See Parts List for serial number ranges.

http://manoman.sqhill.com

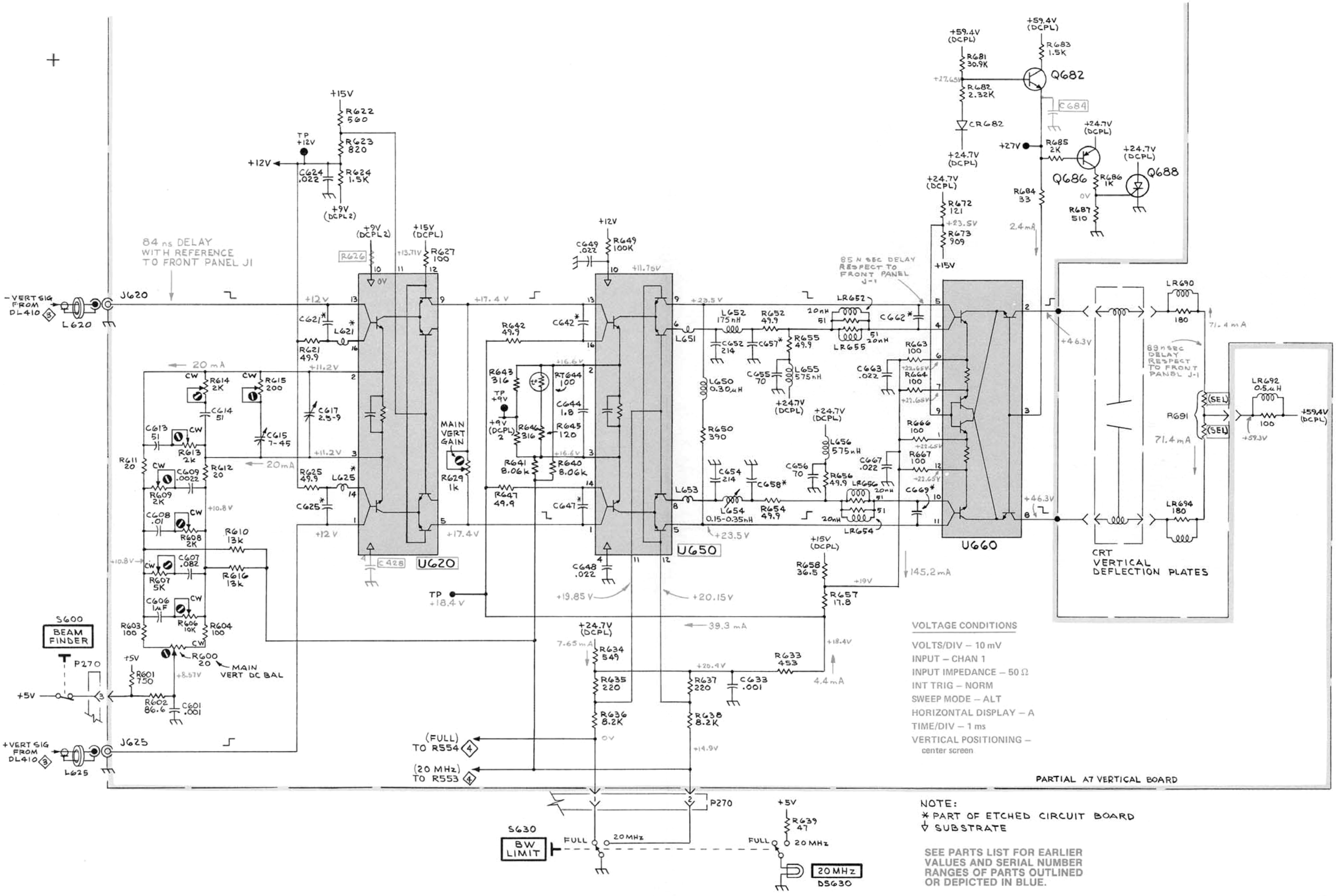

VOLTAGE CONDITIONS

VOLTS/DIV – 10 mV
INPUT – CHAN 1
INPUT IMPEDANCE – 50 Ω
INT TRIG – NORM
SWEEP MODE – ALT
HORIZONTAL DISPLAY – A
TIME/DIV – 1 ms
VERTICAL POSITIONING – center screen

PARTIAL A7 VERTICAL BOARD

NOTE:
* PART OF ETCHED CIRCUIT BOARD
◊ SUBSTRATE

SEE PARTS LIST FOR EARLIER VALUES AND SERIAL NUMBER RANGES OF PARTS OUTLINED OR DEPICTED IN BLUE.

http://manoman.sghill.com

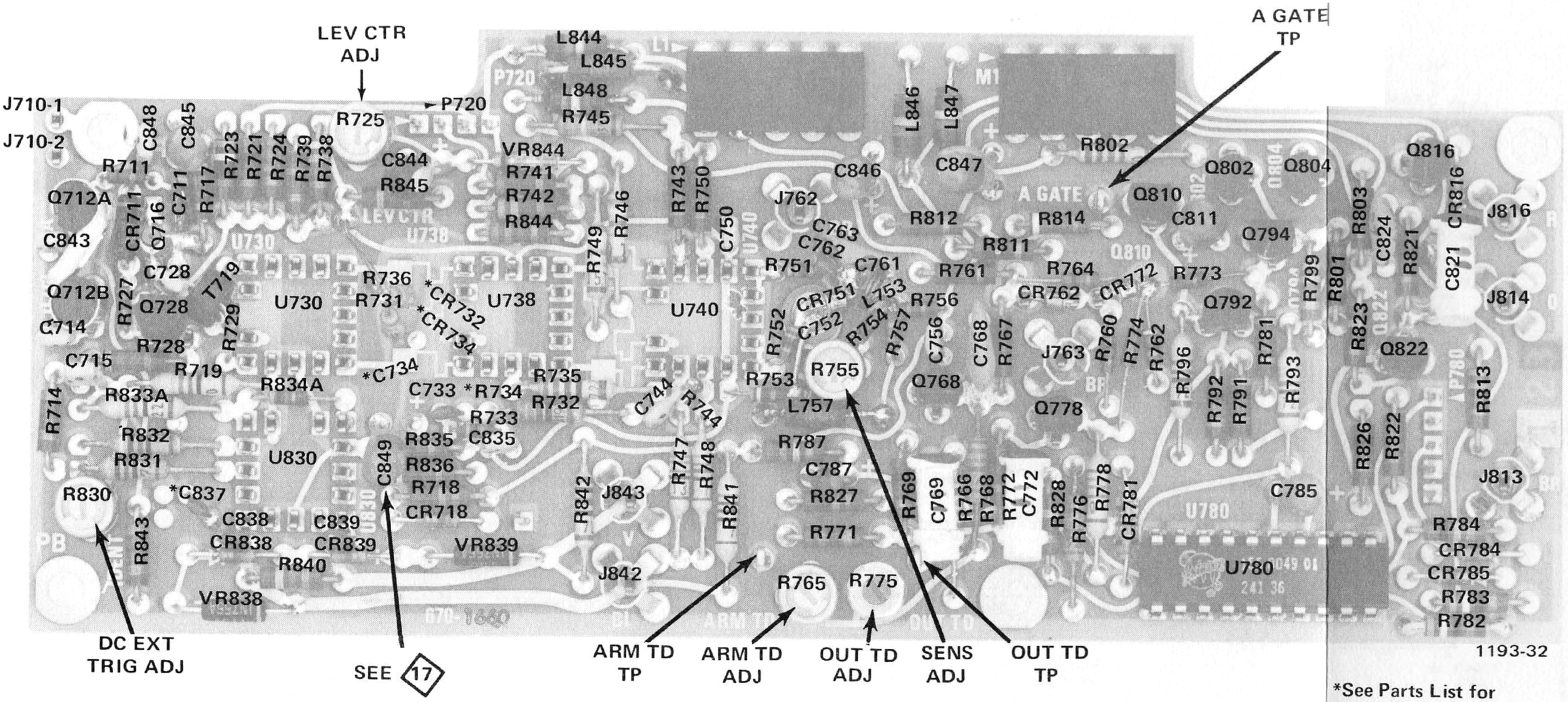

Fig. 8-7A. A8 A Trigger board (485 only).

*See Parts List for serial number ranges.

http://manoman.sqhill.com

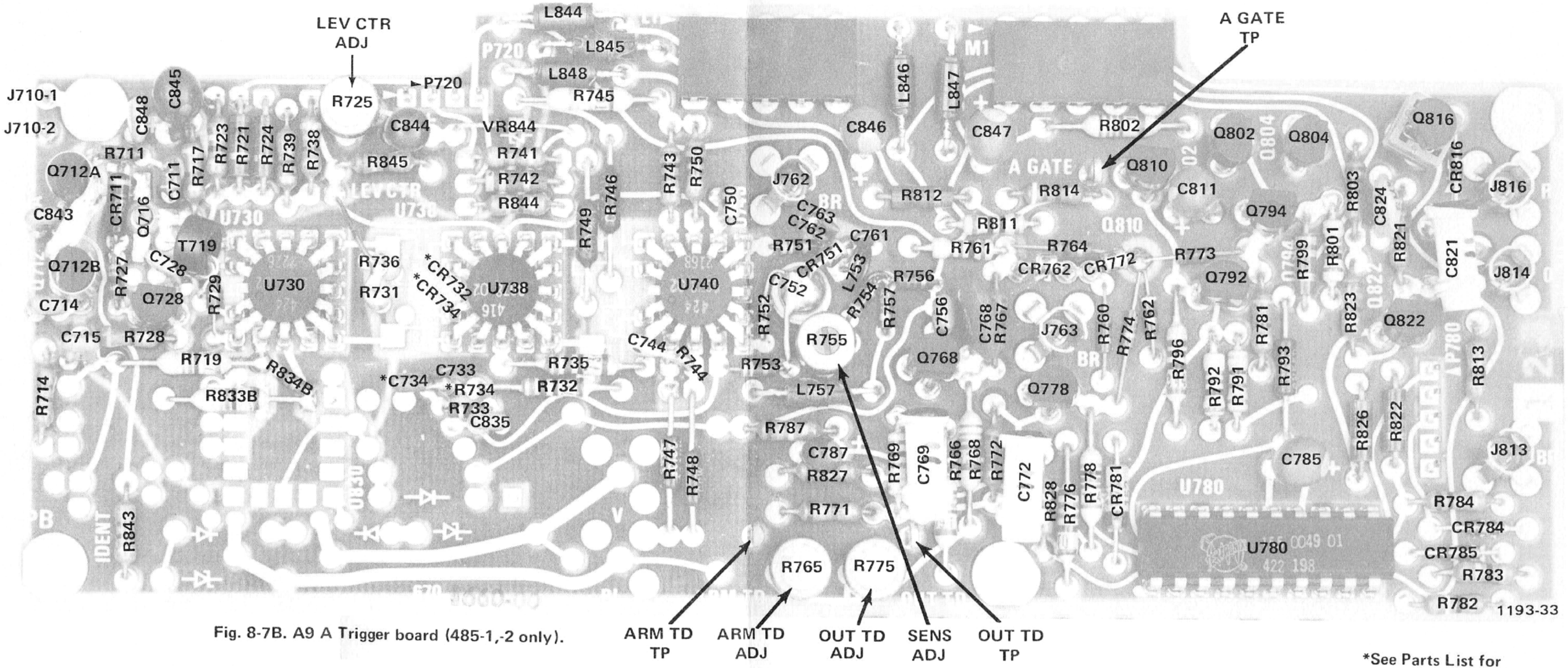

Fig. 8-7B. A9 A Trigger board (485-1,-2 only).

*See Parts List for serial number ranges.

http://manoman.sqhill.com

VOLTAGE CONDITIONS
0.5 div of 1 kHz Cal Signal *
SWEEP MODE—NORM
COUPLING—AC
SOURCE—INT
HORIZ DISPLAY—A
TIME/DIV—1 ms
SLOPE—+
LEVEL—0
A TRIG SOURCE EXT
A EXT TRIG—button pushed
LEVEL control used to center signal
*1 kHz cal signal through 10X attenuator, 50 Ω termination to EXT TRIG Jack.

SEE PARTS LIST FOR EARLIER VALUES AND SERIAL NUMBER RANGES OF PARTS OUTLINED OR DEPICTED IN BLUE.

'A' ARMING TD
'A' OUTPUT TD
'A' TRIG SENS
GANGED WITH R720
S720 SLOPE
S780 SWEEP MODE
AUTO TRIG
NORM TRIG
SINGLE SWEEP
RESET
('A' TRIG) COUPLING S705
('A' TRIG) SOURCE S700
'A' INT TRIG FROM R565 (4)
LINE TRIG SIG FROM R1806 (14)
'A' EXT TRIG J701
INT
LINE
EXT
EXT ÷10
A EXT TRIG S710
A EXT TRIG TO K410 (3)
('A' TRIG) LEVEL
-15V TO S720, (SLOPE SWITCH)
A TRIG IDENTIFY
U740
U738
U730
U780
U830
Q712A
Q712B
Q716
Q768
Q778
Q794
Q792
Q802
Q804
Q810
Q816
Q822
Q728
CR751
CR762
CR772
CR781
CR784
CR785
CR711
CR732
CR734
CR718
CR838
CR839
CR816
J762
J763
J710-1
J710-2
J835
J842
J843
J813
J814
J816
J812
P720
P780
L753
L757
L731*
L732*
L735*
L736*
L746*
L747*
L748*
L749*
T719 1/2
VR838 7.5V
VR839 7.5V
SWP GATE TO Q852, Q854 (7)
'A' GATE
'A' GATE TO R1083 (8)
'A' GATE TO C1552 (12)
'A' GATE STOP TO CR1551 (12)
'A' SWP STOP FROM Q934 (7)
RUN HOLDOFF TO R1072 (8)
FROM P2040-2
TRIG'D
DS781
DS780
READY
FROM A3,4,5,6,7 S1420 (10)
+TRIG TO K410-S2 (3)
-TRIG TO K410-S1 (3)
COMPONENTS WITHIN DASHED LINES NOT USED WITH 485-1, -2.
*R833B AND *R834B USED WITH 485-1, -2 ONLY.
PARTIAL A8 'A' TRIGGER BOARD
1193-34
REV.H, MAR. 1978
485 OSCILLOSCOPE
A TRIGGER GENERATOR (6)
EKP

http://manoman.sqhill.com

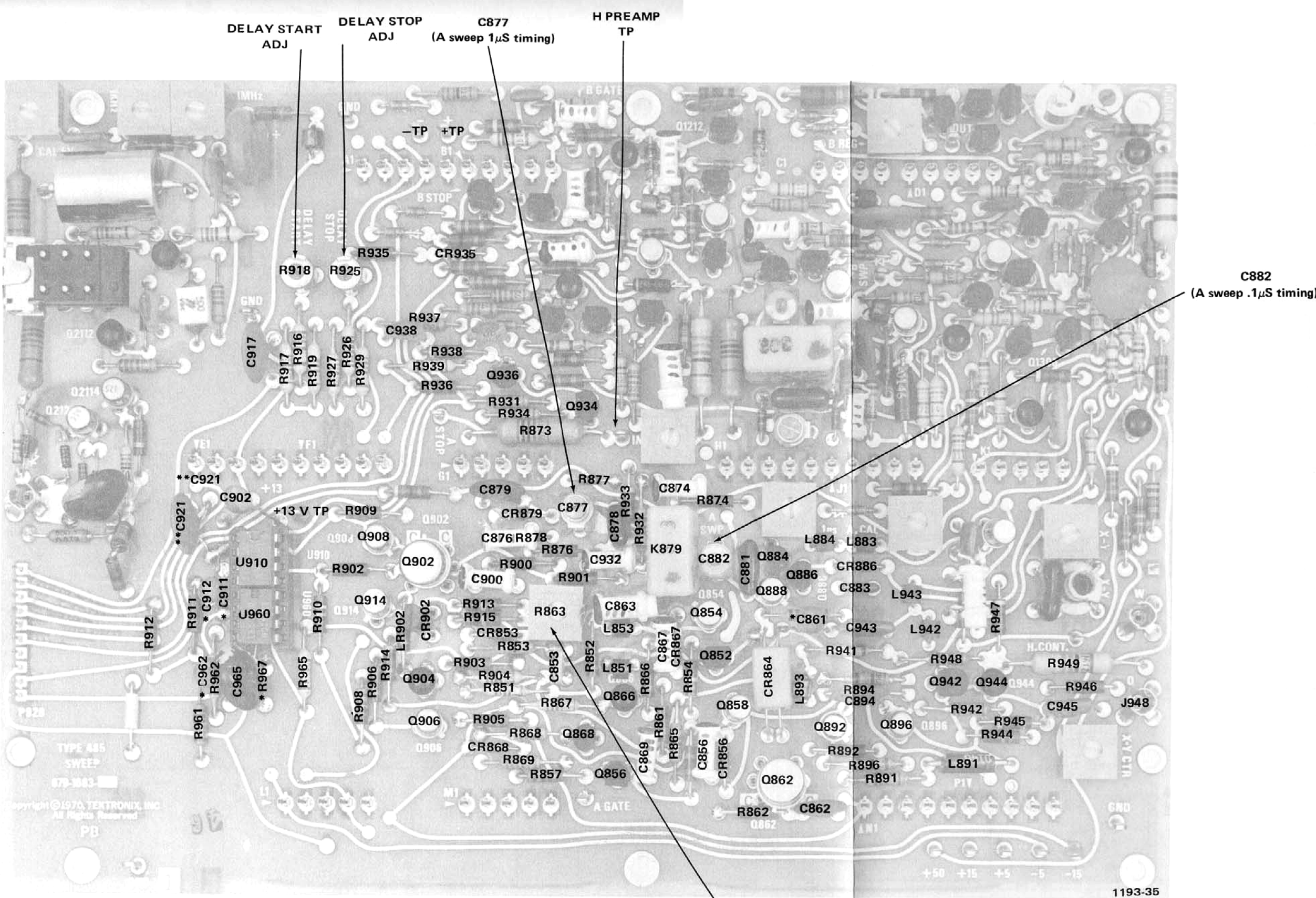

**Alternate location for some SN.

REV. D AUG 1976

Fig. 8-8. A10 Partial Sweep board.

*See Parts List for serial number ranges.

http://manoman.sqhill.com

B DISABLE FROM Q1504 (12)

DELAY PICKOFF TO R1090, R1093 (8)

PARTIAL A9 SWEEP BOARD

SWP GATE FROM Q802, Q804 (6)

+15V
R931 14.3K
C932 18
R933 47
R934 5.23K
R932 4.53K
+50V
R908 6.8K
+15.55V
R906 8.2K
R909 2.2K
Q908
+0.48V
N1
R905 100
Q906
-TP
A5
+TP
B1
DELAY START
+13V
+50V
C917 .02
R917 1.50K
R919 93.1K
R918 10K
R916 16.2K
SEE (17)
TP 910
+50V
R910 24K
+15V
+12.04V
R911 2.7K
R912 1K
C911
C912
U910
P920
DELAY TIME POSITION
R920 50K
C921 .02
+13V
+12.03V
R901 150
A
Q902
B
+8V
R900 470
C900 18
LR902 0.25μH
R902 150
C902 22μF
CR902
Q904
R903 100
R904 1.33K
-5V
Q914
-4.94V
R913 10K
R914 3K
R915 10K
E2
A9
E4
+13V
R927 15.8K
R925 25K
DELAY STOP
R926 30.1K
R929 3.16K
+15V
L891 5μH
R891 45.3
Q892
+13.28V
R892 2K
L893
R894 4.75K
C894 .02
Q896
R896 374
+14-28V
TO R1257 (9)
CR864
C861 22μF
Q862
+11.6V
R865 348
C862 .01
R862 1.8K
S1420
A TIME/DIV (10)
+50V
-15V
A12
A10,11
A25
A13-21
Rt
A22
Ct
A26
L943
C943 1μF
L942
R942 22.6K
+14.30V
R941 9.76K
Q942
R945 47
C945 1μF
Q944
+5.57V
R944 22K
R946 4.7
R947 4.7K
R948 10K
R949 976
J948
J949
A SWP OUT
(REAR)
R861 100
C869 170
R866 1K
C863 27
R863 500
G1
A28
F3
G4
G2
G3
G5
R869 86.6K
Q868
C879 .02
CR879
K879
R873 20K
R877 33
C877 2-18
R878 33
R876 220
C878 62
C876 120
C881 16.8
C882 1.8-9
L883
L884
C883 .022
Q884
+0.05V
R874 100
C874 10
+0.75V
Q888
Q886
CR886
-5V
TP 851
M5
-1.22V
L851
Q852
R851 10.5K
-15V
R857 680
Q856
+5V
CR856
R856 5.6K
C856 24
R852 180
M4
-1.78
L853
Q854
Q858
TP 872
R854 120K
CR867
C867 15
Q866
-14.71V
R867 1.21K
R868 4.75K
CR868
R853 787
C853 0.1
CR853
-5V
TO A SWEEP R1307 (11)
PARTIAL A10 SWEEP BOARD →
FROM EMITTER Q1272 (9)
CR935
+0.16V
M3
R935 2.2K
TP 934
Q934
+5.83V
R936 5.6K
Q936
+3.33V
R938 47
C938 .001
R939 15.4K
R937 4.32K
'A' SWP STOP TO Q816 (6)

VOLTAGE CONDITIONS
HORIZ DISPLAY—A
TIME/DIV—1 ms
SWEEP MODE—NORM
SOURCE—INT
COUPLING—AC
LEVEL—0
DTP—1
1.4 div of 1 kHz Cal Signal

SEE PARTS LIST FOR EARLIER VALUES AND SERIAL NUMBER RANGES OF PARTS MARKED WITH BLUE OUTLINE.

http://manoman.sghill.com

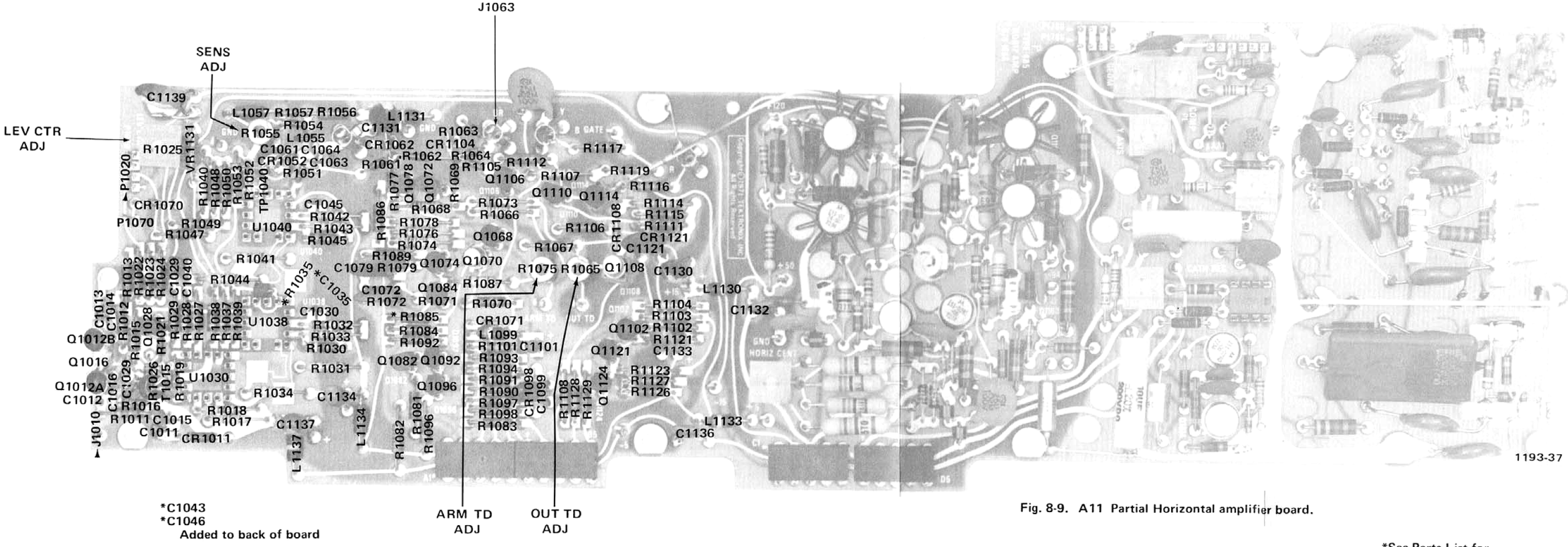

Fig. 8-9. A11 Partial Horizontal amplifier board.

*See Parts List for serial number ranges.

http://manoman.sqhill.com

VOLTAGE CONDITIONS
HORIZ DISPLAY—B
SWEEP MODE—AUTO
'A' LEVEL—CW
'B' TRIGGER SOURCE—INT
'B' TRIGGER COUPLING—AC
'B' TRIGGER LEVEL—0
DTP—1
TIME/DIV—1 ms
1.4 div of 1 kHz Cal Signal

NOTE:
* PART OF ETCHED CIRCUIT BOARD
⏚ SUBSTRATE

SEE PARTS LIST FOR EARLIER VALUES AND SERIAL NUMBER RANGES OF PARTS OUTLINED OR DEPICTED IN BLUE.

DELAY PICKOFF FROM Q902 ◇6◇

'A' GATE FROM R814 ◇6◇

RUN HOLDOFF FROM PIN 17, U780 ◇6◇

S1020 (LEVEL/SLOPE) +/−

('B' TRIG) COUPLING S1005

('B' TRIG) SOURCE S1000A

'B' INT TRIG SIG FROM R559 ◇4◇

'A' J1001 EXT TRIG

B RUNS AFTER DELAY TIME

('B' TRIG) S1000B SOURCE

P1070 B RUNS AFTER DELAY TIME — INT, EXT, EXT ÷10

PARTIAL A10 SWEEP GEN BOARD ◇9◇ CR1273

TO CR1530 CR1531 ◇12◇ A13 POWER BOARD

A TIME/DIV S1420 ◇10◇ A12 TIMING BOARD

B TIME/DIV S1460 ◇10◇

POSITION ◇11◇

-SWEEP GATE TO Q1206 ◇9◇

+SWEEP GATE TO Q1202 ◇9◇

'B' SWEEP STOP FROM R1271 ◇9◇

J1116 WH-RED — J1119 B GATE (REAR)

J1117 WH-YEL 'B' GATE TO R1554 ◇12◇

'B' TRIG LEVEL

PARTIAL A11 HORIZ AMP BOARD

485 OSCILLOSCOPE

1193-38
REV. F, AUG 1977

B TRIGGER GENERATOR ◇8◇ mgf 773

http://manoman.sqhill.com

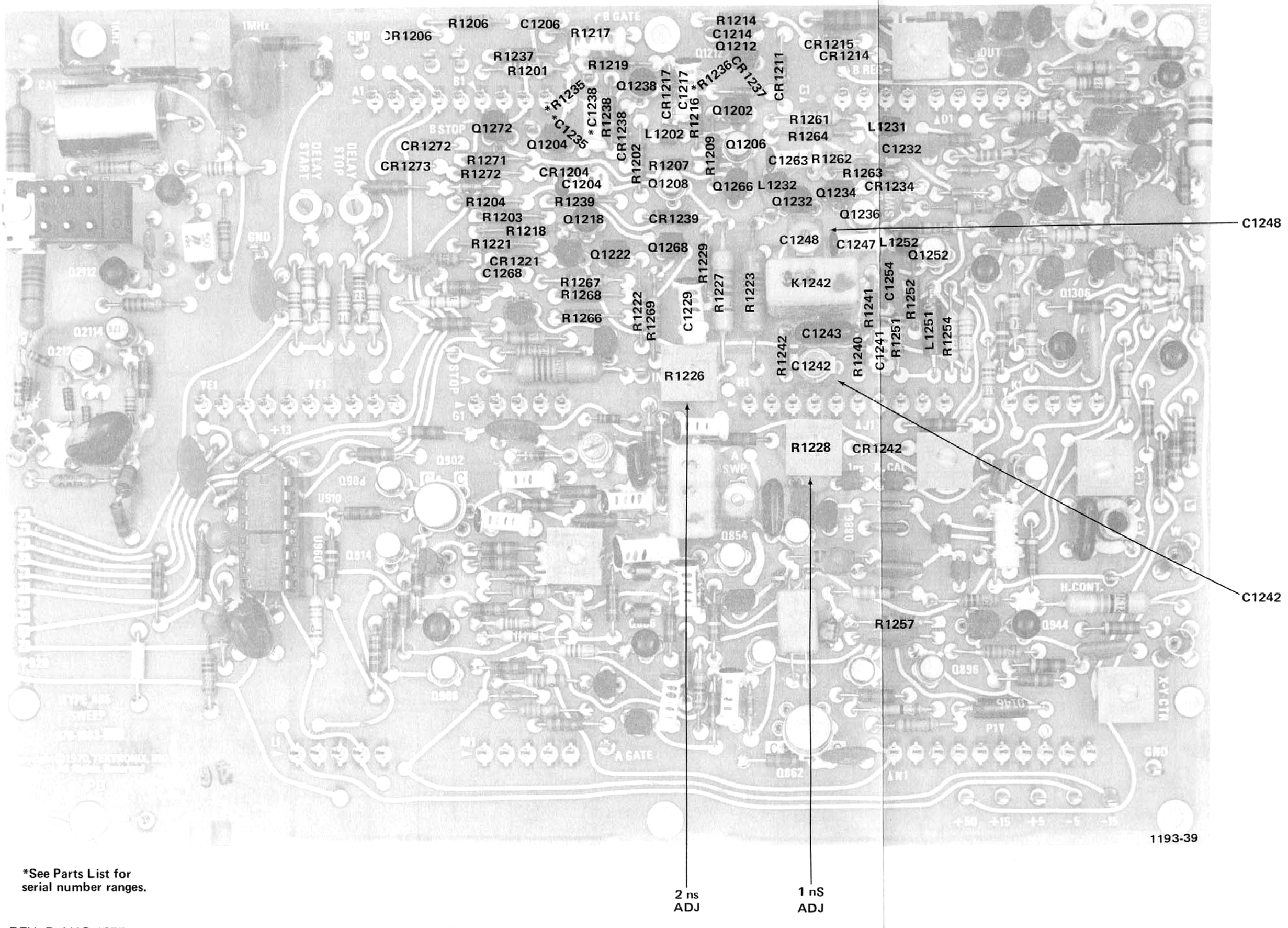

*See Parts List for serial number ranges.

Fig. 8-10. A10 Partial Sweep board.

http://manoman.sqhill.com

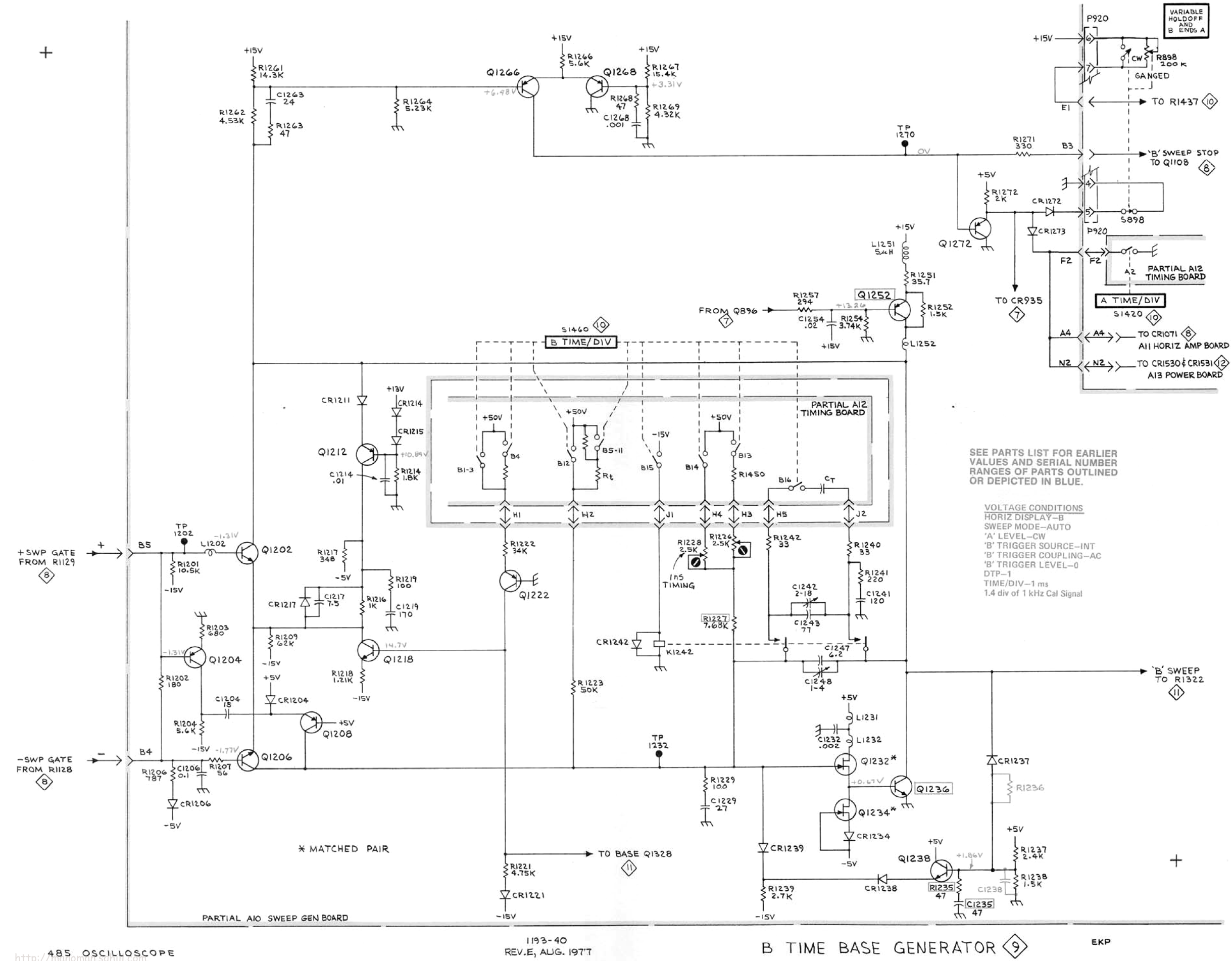

SEE PARTS LIST FOR EARLIER VALUES AND SERIAL NUMBER RANGES OF PARTS OUTLINED OR DEPICTED IN BLUE.

VOLTAGE CONDITIONS
HORIZ DISPLAY—B
SWEEP MODE—AUTO
'A' LEVEL—CW
'B' TRIGGER SOURCE—INT
'B' TRIGGER COUPLING—AC
'B' TRIGGER LEVEL—0
DTP—1
TIME/DIV—1 ms
1.4 div of 1 kHz Cal Signal

http://manoman.sqhm.com

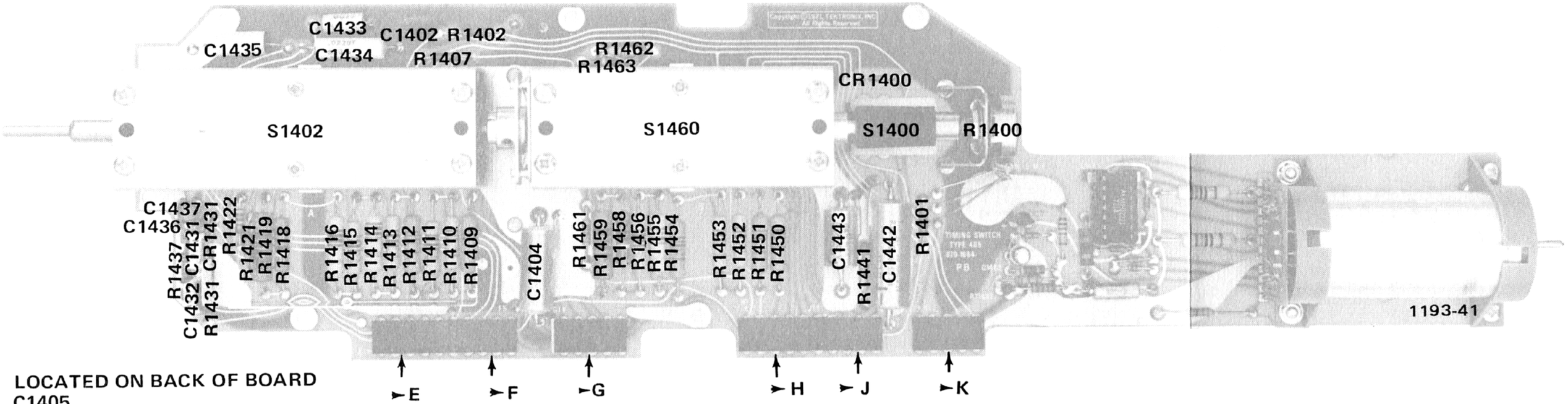

Fig. 8-11. A12 Partial Timing switch board.

http://manoman.sghill.com

Fig. 8-13

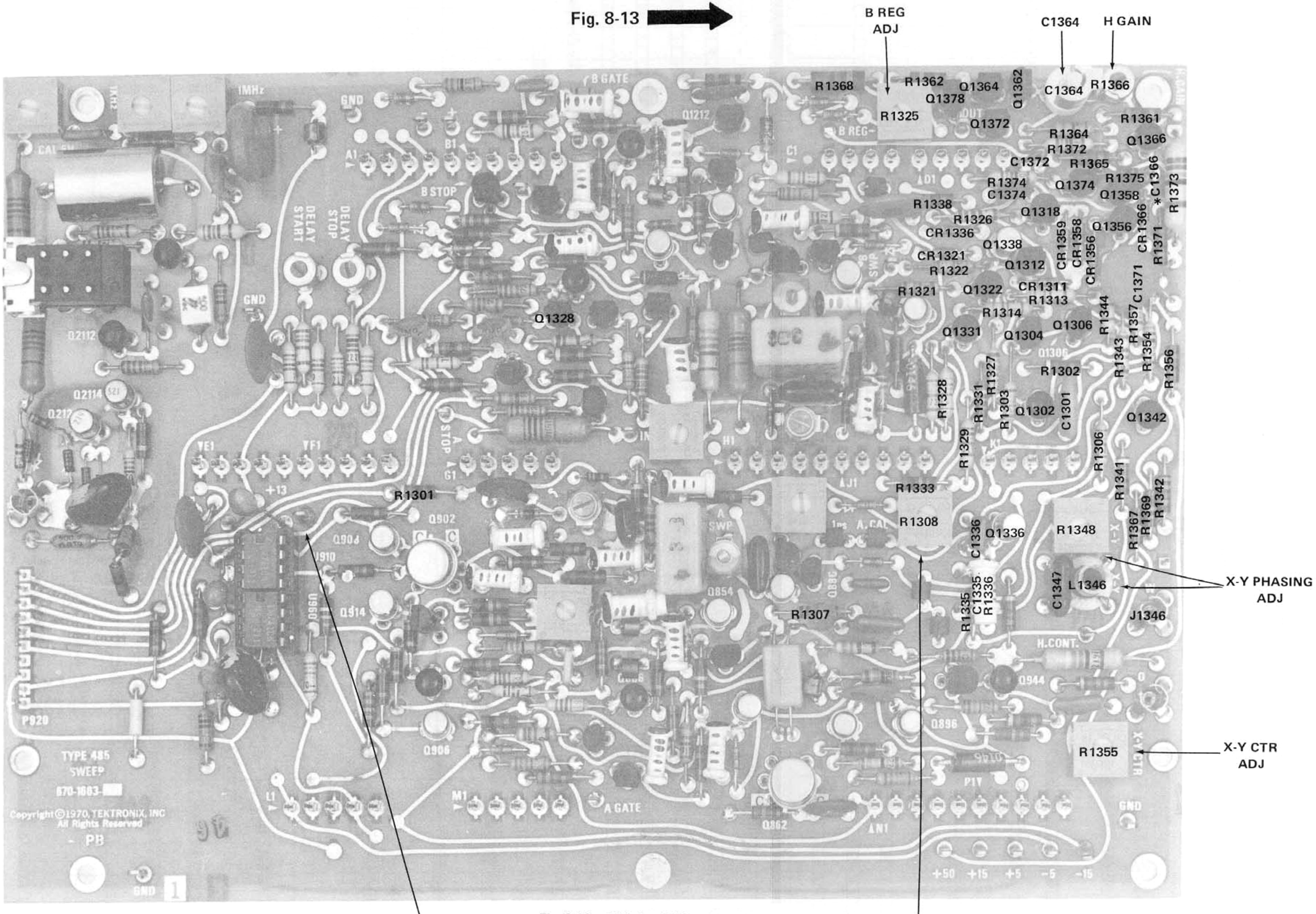

Fig. 8-12. A10 Partial Sweep board.

REV. C, SEPT 1974

*See Parts List for serial number ranges.

http://manoman.sqhill.com

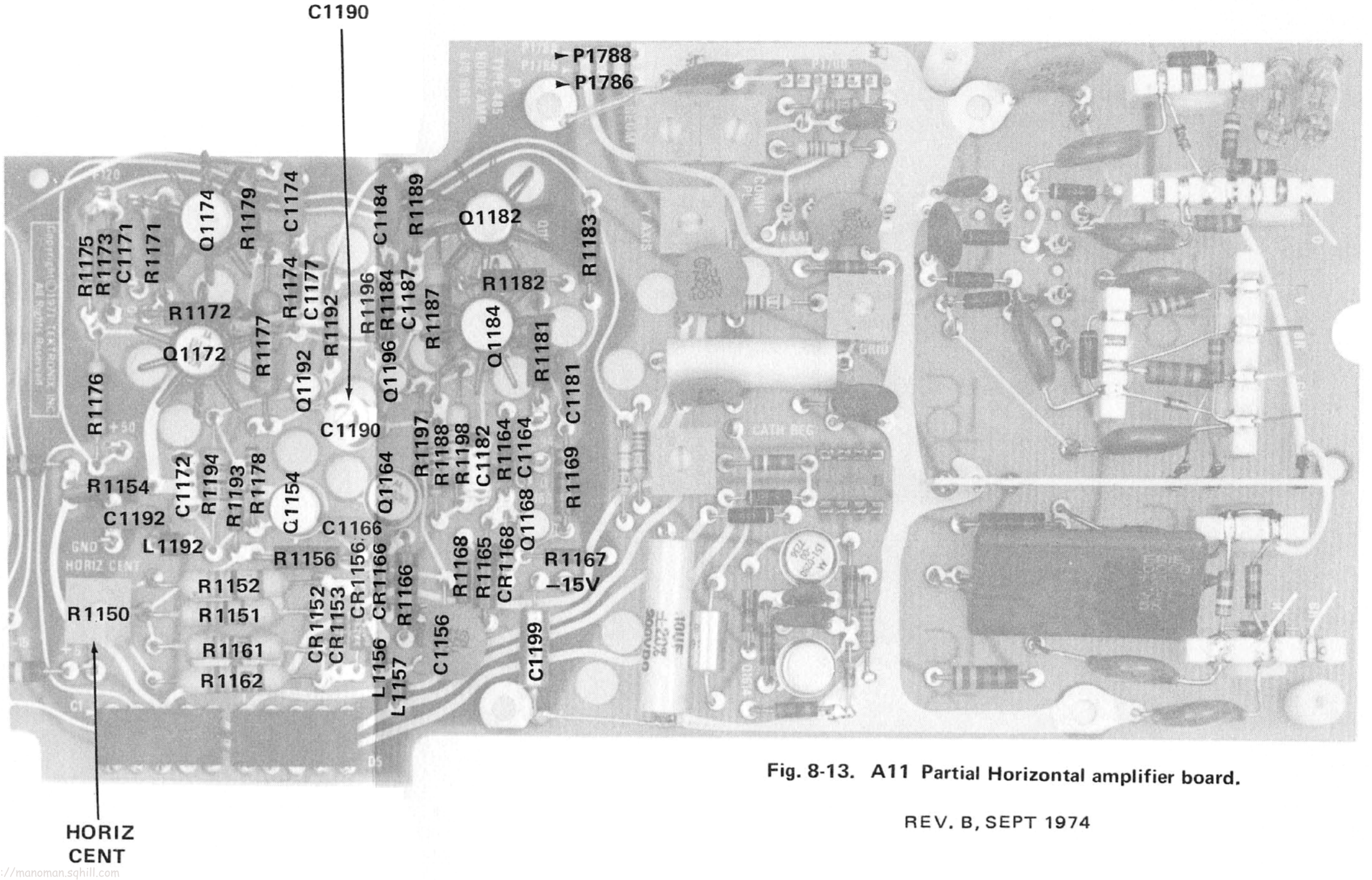

Fig. 8-13. A11 Partial Horizontal amplifier board.

REV. B, SEPT 1974

http://manoman.sqhill.com

SWITCH SHOWN IN .5S POSITION

S1460 B TIME/DIV

S .5 .2 .1
mS 50 20 10 5 2 .5 .2 .1
uS 50 20 10 5 2 .5 .2 .1
nS 50 20 10 5 2

22 21 20 19 18 17 16 15 14 13 12 11 10 9 8 7 6 5 4 3 2 1

TO R1327 · TO R1101 · TO R1303 · TO Q1332 · TO R1240 · TO R1242 · TO K1242 · TO R1228 · TO R1226 · TO R1223 · TO R1221

J5 F4 J4 J3 J2 J6 J1 H4 H3 H2 H1

-5V +13V -5V -15V

R1441 750 · C1442 1uF · C1443 .01 · R1450 10.7K

R1451 2.5M · R1452 1.5M · R1453 500k · R1454 250k · R1455 150k · R1456 50k · R1458 5M · R1459 15M · R1461 442k · R1462 121k · R1463 200k

A12 TIMING BOARD

+15V · P920 · R898 · CW · P920 · S898 'B' ENDS 'A' · VARIABLE HOLDOFF AND B ENDS A

E1 E1 · R1437 5.11k

S1400 CAL IN

+50V · R1407 15k · R1402 30k · R1400 5k · VARIABLE · R1401 680 · +13V · C1402 .02 · CR1400 -141-02 · C1404 .01 · C1405 1uF · -15V

R1409 2.5M · R1410 1.5M · R1411 500k · R1412 250k · R1413 50k · R1414 100k · R1415 60k · R1416 20k · R1418 5M · R1419 15M · R1421 102k · R1422 430k

+15V · R1431 240k · CR1431 -141-02 · C1431 470 · C1433 .0017 · C1434 .022 · C1435 0.22 · C1436 2.2uF · C1437 22uF · C1432 170

+50V +15V +13V -5V -15V

K1 F5 B3 K3 K4 K5 G1 G3 G5 G4 G2 F3 E2 E4 F1 F2 E5

TO R863 · TO R877 · TO R878 · TO K879 · TO R873 · TO R869 · TO R920 · TO R924 · FROM PIN 8 U760 · TO CR1532 · TO CR1071 VIA A4 · TO CR1273 · TO CR1531 & CR1530 VIA N2

NOTE:
ALL RESISTORS ½W, 1% EXCEPT AS NOTED.

SEE PARTS LIST FOR EARLIER VALUES AND SERIAL NUMBER RANGES OF PARTS OUTLINED OR DEPICTED IN BLUE.

28 26 27 25 23 24 22 21 20 19 18 17 16 15 14 13 12 11 10 9 8 7 6 5 4 3 1 2

S .5 .2 .1
mS 50 20 10 5 2 1 .5 .2 .1
uS 50 20 10 5 2 1 .5 .2 .1
nS 50 20 10 5 2 1

SWITCH SHOWN IN .5S POSITION

A TIME/DIV AND DELAY TIME S1420

REV.E, AUG. 1977

1193-42

TIMING SWITCHES ◇10

GAB

485 OSCILLOSCOPE

http://manoman.sqhill.com

SEE PARTS LIST FOR EARLIER VALUES AND SERIAL NUMBER RANGES OF PARTS OUTLINED OR DEPICTED IN BLUE.

+13V
B19
B20
R1441
TO R1101 (8)
J4
P920
POSITION
R1300 20K
R1301 47
+13V FROM (7)
+9.16V
C1301 .02
Q1302
R1302 9.1K
R1303 1.74K
+8.53V
R1306 1.74K
Q1306
Q1304
B TIME/DIV S1460 (10)
'A' SWEEP FROM Q888 (7)
R1307 2.32K
R1308 500 A CAL
Q1312
CR1311
R1313 24.3K
+0.14V
R1314 3.92K
B REGIS
R1325 10K
R1326 11.5K
'B' SWEEP FROM Q1236 (9)
R1322 2.49K
R1321 2.43K
CR1321
Q1322
-1.52V
R1327 2.67K
J5
PARTIAL TIMING BRD
B22
-5V
B18
R1331 24K
Q1331
-19.96V
J3
Q1328
R1328 3.57K
R1333 20K
FROM Q1222 (9)
R1329 12.7K
-15V
Q1318
CR1358
Q1358
R1361 82
Q1362
R1362 1.3K
Q1364
CR1359
2 ns LINEARITY
C1364 1.9-15.7
HORIZ GAIN
R1366 200
R1364 499
TP 1364
Q1374
C1374 .0015
R1375 68
R1374 162
D3
D2
R1371 11
R1373 113
C1371 .02
R1372 162
C1372 12
Q1372
-1.8V
R1365 270
Q1366
-2.25V
Q1378
R1368 510
C1366 .001
D4
D5
+5V
R1338 680
-1.52V
CR1336
Q1338
HORIZ CONT TP 1335
C1335 47
R1335 2K
-4.61V
Q1336
R1336 10
C1336 0.1
R1341 910
-6.63V
Q1342
R1342 3.3K
+13V
R1344 24.3K
R1343 3.92K
HORIZ CONTROL FROM R1521 (12)
N4
WHITE
X-Y SIG FROM R572 (4)
J1346
L1346 2-6μH
X-Y HF COMP
C1347 70
X-Y LF COMP
R1348 100
R1354 75
+0.67V
Q1356
CR1356
R1357 2.15K
X-Y CENTER
R1355 1K
R1356 1.6K
CR1366
R1367 1.2K
R1369 10K
S600B
BEAM FINDER
P1560
+15V
PARTIAL A10 SWEEP BOARD
PARTIAL A11 HORIZ AMP BOARD
+120V
TP1173
R1173 1.8K
Q1174
+0.03V
R1175 7.5K
R1174 47
R1176 12.1K
+50V
R1171 6.8K
R1172 6.8K H
C1174 .02
C1171 .02
+15V
R1154 1.1K
Q1154
-4.87V
Q1172
TP 1154
R1179 56
TO LEFT HAND DEFL PLATE CRT
C1172 2.2
R1177 13.7K
C1177 1.5
R1178 1.10K
R1151 523
-15V
+5V
L1192
C1192 .02
R1156 270
R1152 681
R1192 120
Q1192
0V
R1194 237
R1193 3.9K
CR1153
CR1152
CR1156
R1150 250
HORIZ CENTER
C1166 .02
L1156
L1157
C1156 .02
CR1166
H.F. 5nS
C1190 1.9-15.7
R1196 120
Q1196
R1166 130
R1198 237
R1197 3.9K
R1188 1.10K
R1162 681
Q1164
-4.89V
TP 1183
+120V
R1183 1.8K
C1164 .02
Q1184
R1184 47
C1187 1.2
R1187 13.7K
R1181 6.8K
R1182 6.8K
C1181 .02
C1184 .02
C1182 2.2
R1164 100
Q1168
R1169 330
TP 1169
Q1182
R1165 100
CR1168
R1167 3.6K
R1168 1.2K
R1189 56
TO RIGHT HAND DEFL PLATE CRT
R1161 523

VOLTAGE CONDITIONS
'B' TIME/DIV—0.1 ms
'A' TIME/DIV—1 ms
HORIZ DISPLAY—ALT
SWEEP MODE—NORM
'A' TRIGGER SOURCE—INT
'A' TRIGGER COUPLING—AC
'B' TRIGGER SOURCE—B RUNS AFTER DELAY TIME
HORIZ POSITIONING—MIDR

HORIZONTAL AMPLIFIER (11) mgf

http://manoman.sqhill.com

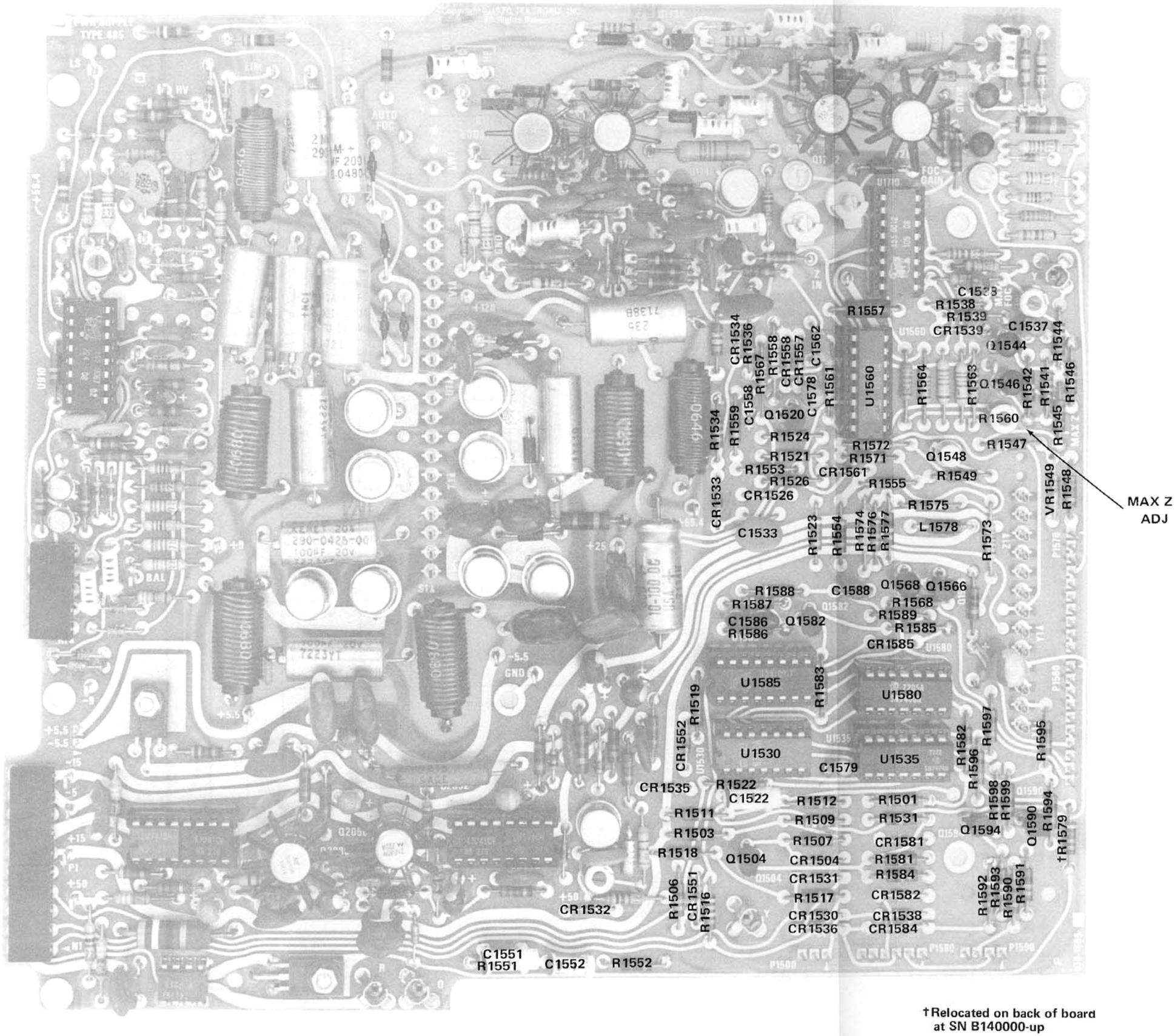

Fig. 8-14. A13 Partial Power supply board.

http://manuals.hpnil.com

S1500 HORIZONTAL DISPLAY
DELAYED SWEEP
A | INTEN | ALT | B

A TIME/DIV S1420 — P/O A12, TIMING
BEAM CURRENT FROM U1600

CR1532 · C1533 .01 · R1536 2.2M · C1537 0.27
CR1533 · CR1534 · CR1535 · C1538 10nF · R1538 15k · CR1539
R1534 680k · R1534 10k · R1541 68k · R1542 150k · Q1546 · TP1544 · R1545 6.8k · R1544 3.3k · R1546 33k · Q1544
BEAM LIMIT TO CR1959 (14)

R1511 100k · R1512 15k · R1503 10k · R1501 47k · R1531 10k · R1581 10k · R1582 10k · R1584 10k
P1500 · P1580 · P1590
Q1504 · CR1504 · R1507 5.1k · R1506 20k · R1509 39k · R1517 15k · R1518 15k · R1519 8.2k · R1516 430k · Q1520
U1535A

U1535A	A/INTEN	ALT	A=1,2,5ns OR B	X-Y
CONTROL 1	LO	HI	—	—
CONTROL 4	HI	HI	LO	LO
OUTPUT 5	LO	ALT	HI	HI
OUTPUT 6	HI	ALT	LO	—

+0.6V B or A=1, 2, 5 ns
−0.5V A or X-Y
'B' DISABLE TO BAGE Q906 (7)

≈1V X-Y
≈−3V B
≈−5V A
HORIZ CONTROL TO R1335 (11)

R1521 360 · R1522 2.2k · C1522 39 · R1523 910 · R1524 62k · R1526 120 · CR1526
A-B CONTROL AUTO FOCUS TO PIN 15, U1710 (13)

TRACE SEPARATION TO R466 (3)

CR1530 · U1530C · U1530B · U1535A FF · CR1531 · CR1536 · CR1538
PARTIAL A12 TIMING BOARD — A TIME/DIV S1420 — PARTIAL A10 SWP BD — TO CR1273 (5)
TO CR1071 A11 HORIZ AMP BD (8)

'A' GATE FROM QB10 (6) · WH-OR · J1549 · C1552 68 · R1552 5.1k
'A' GATE STOP FROM CRB16 (6) · WH-RED · C1551 27 · R1551 1.5k · J1551
'B' GATE FROM R1117 (8) · WH-YEL · J1554 · R1554 30 · R1557 510 · J1557
(REAR) J1555 Z AXIS IN
R1555 6.2k · R1553 6.2k · CR1551 · CR1552 · CR1557 · CR1558 · R1558 1.78k · C1558 2.2μF · R1559 100

U1535B

U1535B	CH1/X-Y	CHOP/ALT	ADD	CH2
CONT 10	HI	HI	LO	LO
PIN 13	LO	HI	LO	HI
OUT 8	HI	ALT	HI	LO
PIN 9	LO	ALT	HI	HI

R1560 1k · CW MAX Z · R1561 3.09k · CR1561
U1560 M015
R1567 1.37k · R1577 100k · R1576 47k · R1574 4.32k · R1575 10k · R1573 3.32k · R1572 3.32k · R1571 120k · C1562 .001 · R1564 3.92k · R1563 11.5k
Z AXIS TO R1741 (13)
'B' INTENSITY AUTO FOCUS TO R1706 (13)
INTENSITY AUTO FOCUS TO R1703 (13)

VR1549 15V · R1547 3.9k · R1548 6.8k · Q1548 · R1549 2.2k
P1570 · P1560
INTENSITY · R1570 2K · B INTENSITY · R1569 5K

Q1566 · Q1568 · R1568 82k · R1595 1k · R1594 1k · R1597 1k · R1596 1k
CH ON ≈ 0 mA
CH OFF ≈ 4 mA
CH2 VERT LOGIC TO Q436 (3)
CH1 VERT LOGIC TO Q416 (3)

L1578 2.7 · C1578 22μF · R1579 10 · C1579 4.7μF

U1530A · U1580A · U1580B · U1580D · U1580C · U1535B FF
R1583 10k · Q1582 · CR1582 · CR1581
U1585 · C1586 18p · R1586 470 · R1587 3.9k · R1588 9.1k · C1588 .001 · R1585 22k · CR1585 · R1589 7.5k · CR1584

	+5.5V	GND
U1530	14	7
U1535	14	7
U1580	14	7

SEE PARTS LIST FOR EARLIER VALUES AND SERIAL NUMBER RANGES OF PARTS OUTLINED OR DEPICTED IN BLUE.

S1580 VERTICAL MODE
CH1 | ALT | CHOP | ADD | X-Y | CH2
CH1 GND TO R93 (1)
CH2 GND TO R93 (1)
TO R412 (3) · +15V

S1590 INT TRIG · CH2 · CH1 · NORM

R1592 910 · R1598 51 · R1599 51 · R1590 1k · R1591 20k · R1593 20k · Q1590 · Q1594
CH ON ≈ 0 mA
CH OFF ≈ 4 mA
CH1 TRIG LOGIC TO Q518 (4)
CH2 TRIG LOGIC TO Q538 (4)
PARTIAL A13 POWER BOARD

485 OSCILLOSCOPE
REV. F, AUG. 1977
1193-47
LOGIC (12)
EKP

http://manoman.sqhill.com

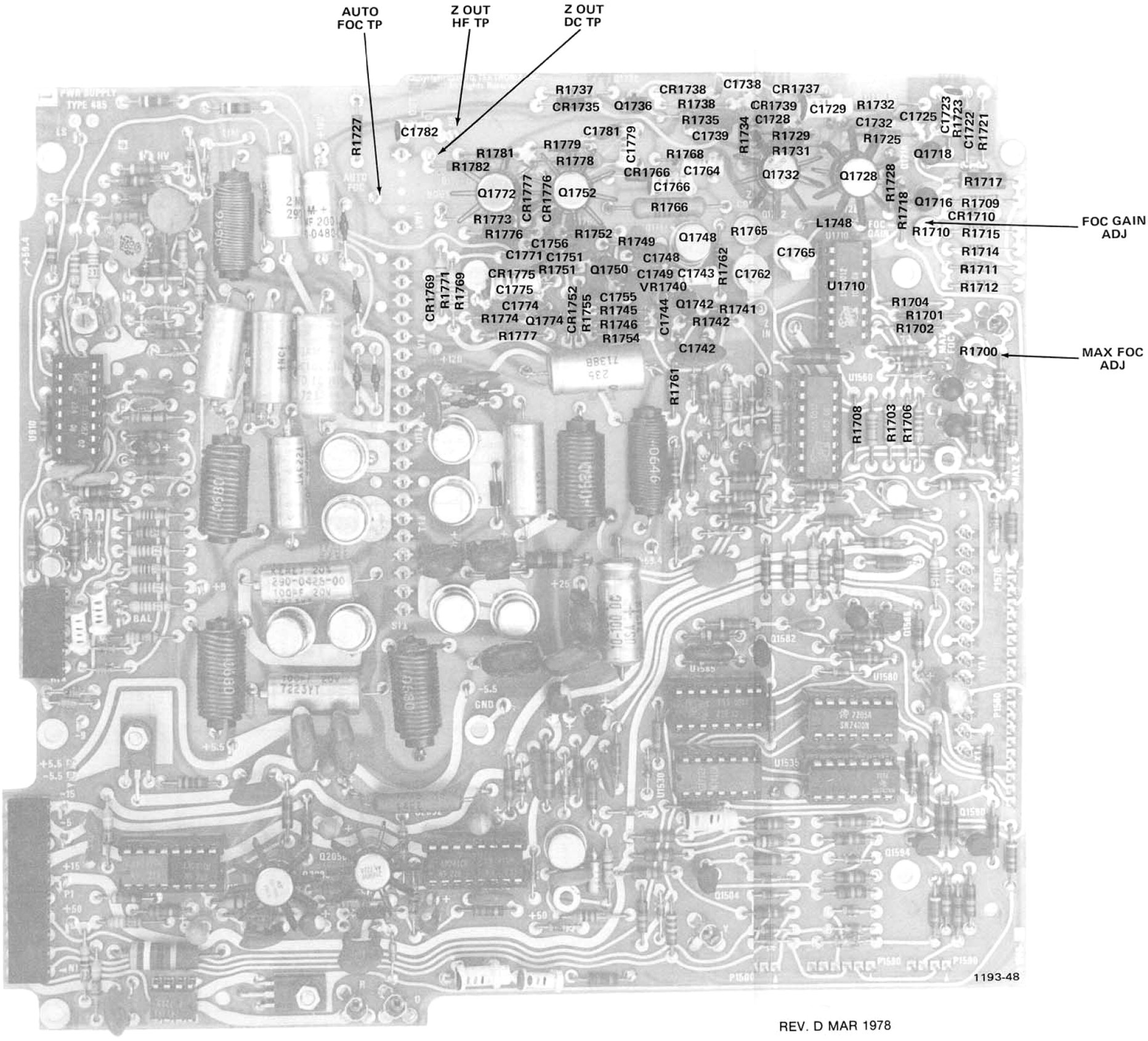

REV. D MAR 1978

Fig. 8-15. A13 Partial Power Supply board.

http://manoman.sqhill.com

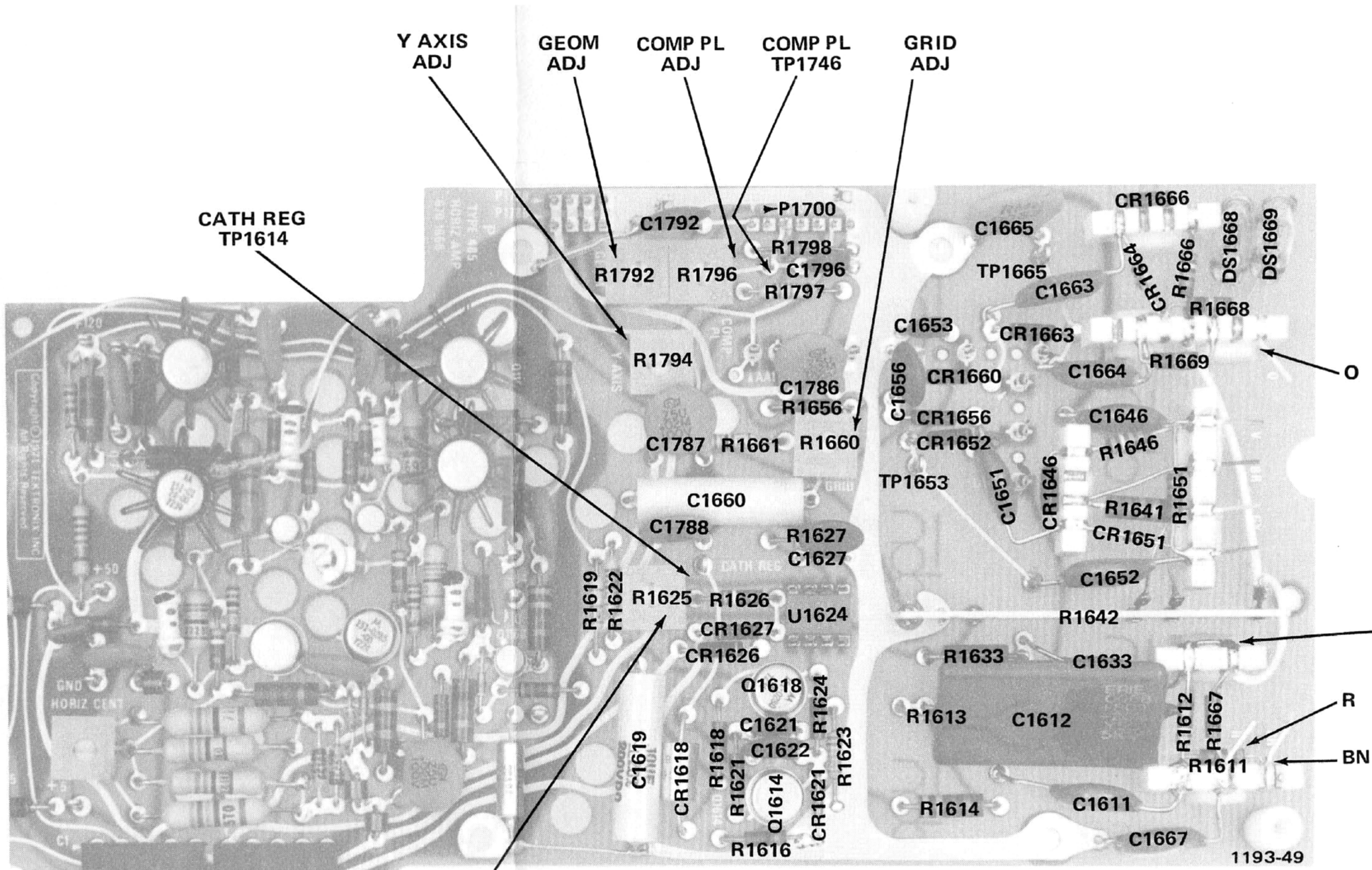

FIG. 8-16. A11 Partial Horizontal amplifier board.

http://manoman.sqhill.com

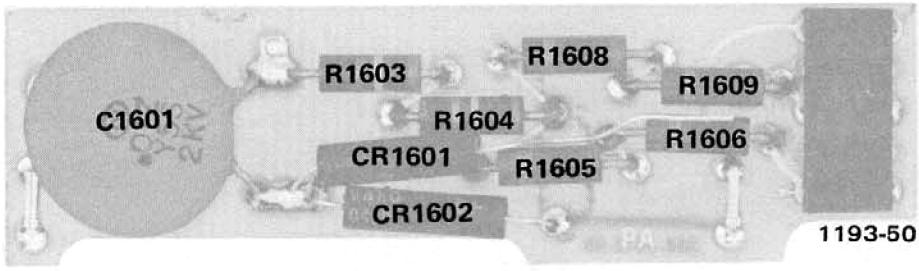

Fig. 8-17. A15 Partial Transformer board.

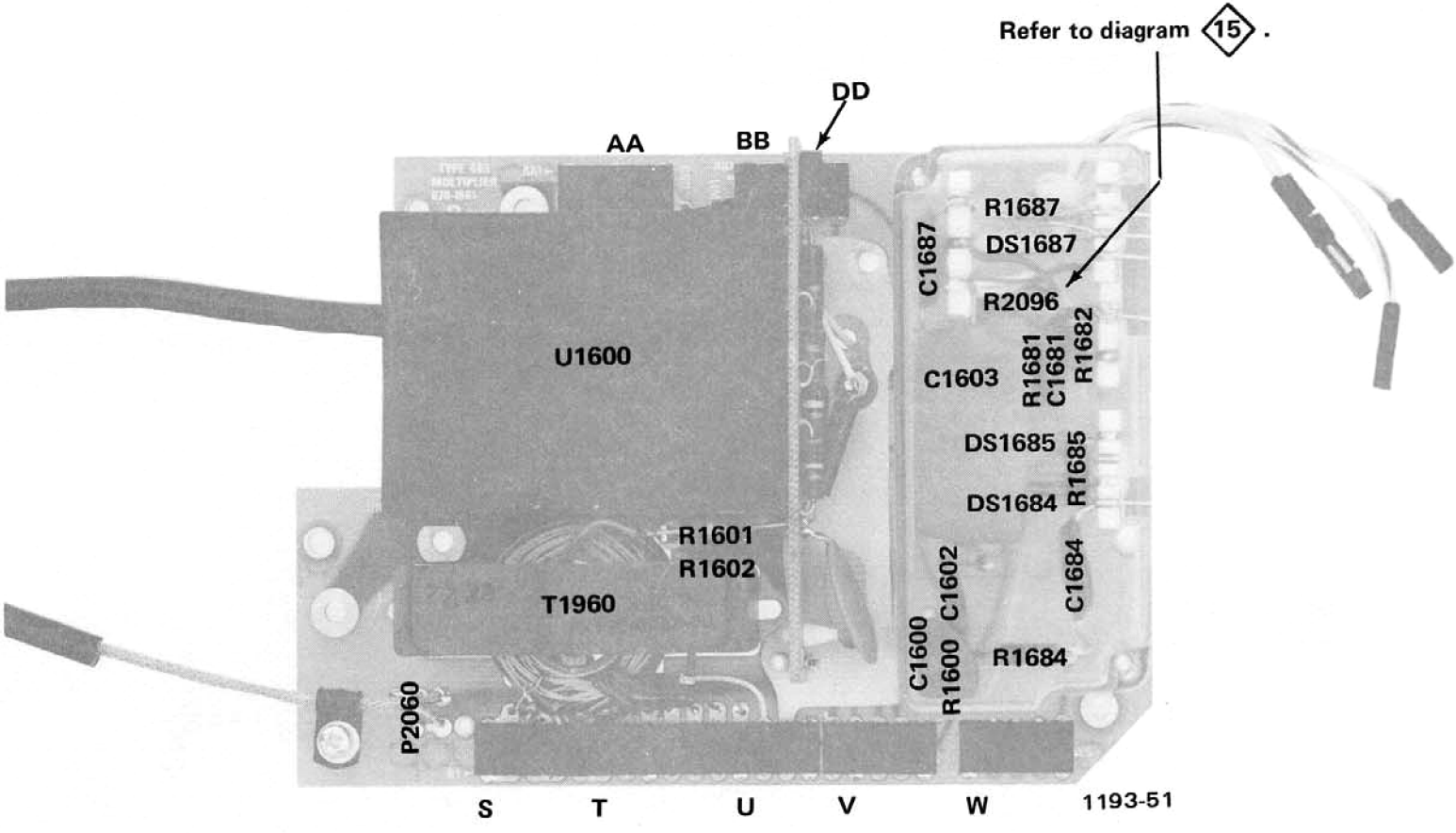

Fig. 8-18. A15 Transformer board.

http://manoman.sqhill.com

Fig. 8-17

Fig. 8-18

VOLTAGE CONDITIONS
'B' TIME/DIV—0.1 ms
'A' TIME/DIV—1 ms
HORIZ DISPLAY—ALT
SWEEP MODE—NORM
'A' TRIGGER SOURCE—INT
'A' TRIGGER COUPLING—AC
'B' TRIGGER SOURCE—B RUNS AFTER DELAY TIME
HORIZ POSITIONING—MIDR

SEE PARTS LIST FOR EARLIER VALUES AND SERIAL NUMBER RANGES OF PARTS OUTLINED OR DEPICTED IN BLUE.

BEAM CURRENT TO Q1544 (12)

U1600 X6 MULT

PARTIAL A13 POWER BOARD

PARTIAL A15 TRANSFORMER BOARD

PARTIAL A11 HORIZ AMP BOARD

LOGIC (12)

U1710 -0012-

U1624 741C

Z AXIS

Z OUT DC TP1781

Z OUT HF TP1782

Z IN TP1741

Z AXIS U1560 FROM PIN 8

AUTO FOCUS TP

AUTO FOCUS

MAX FOCUS

FOCUS GAIN

INTENSIFY AUTO FOCUS FROM R1572

'B' INTENSITY AUTO FOCUS FROM R1576

A-B CONTROL AUTO FOCUS FROM R1523

Z COMP

I BOOST TP1774

CATH REG

CATH REG TP1614

GRID BIAS R1660 20K

CATHODE SENS TO R1958 (14)

FROM T1960

-3000V TEST POINT (MARKED -2950V IN SOME INSTRUMENTS)

REV. E, MAR. 1978

1193-52

485 OSCILLOSCOPE

CRT CIRCUIT (13) VRS

V1700

+18kV

(REAR) TRACE ROTATION

ASTIG (REAR)

GEOM

Y AXIS

COMP PLATES

http://manoman.sqhill.com

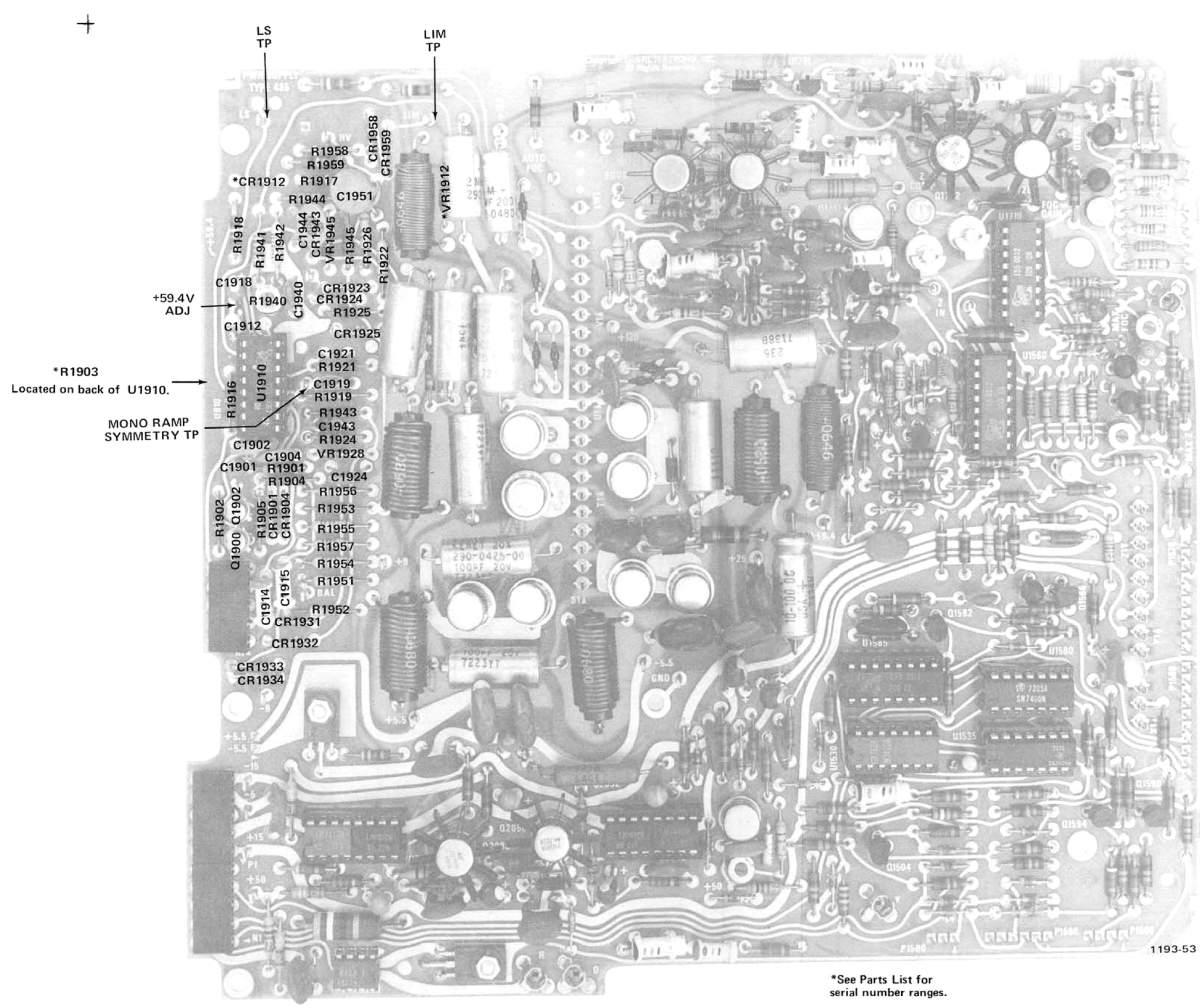

*See Parts List for serial number ranges.

Fig. 8-19. A13 Partial Power Supply board.

REV. E MAR 1977

http://manoman.sqhill.com

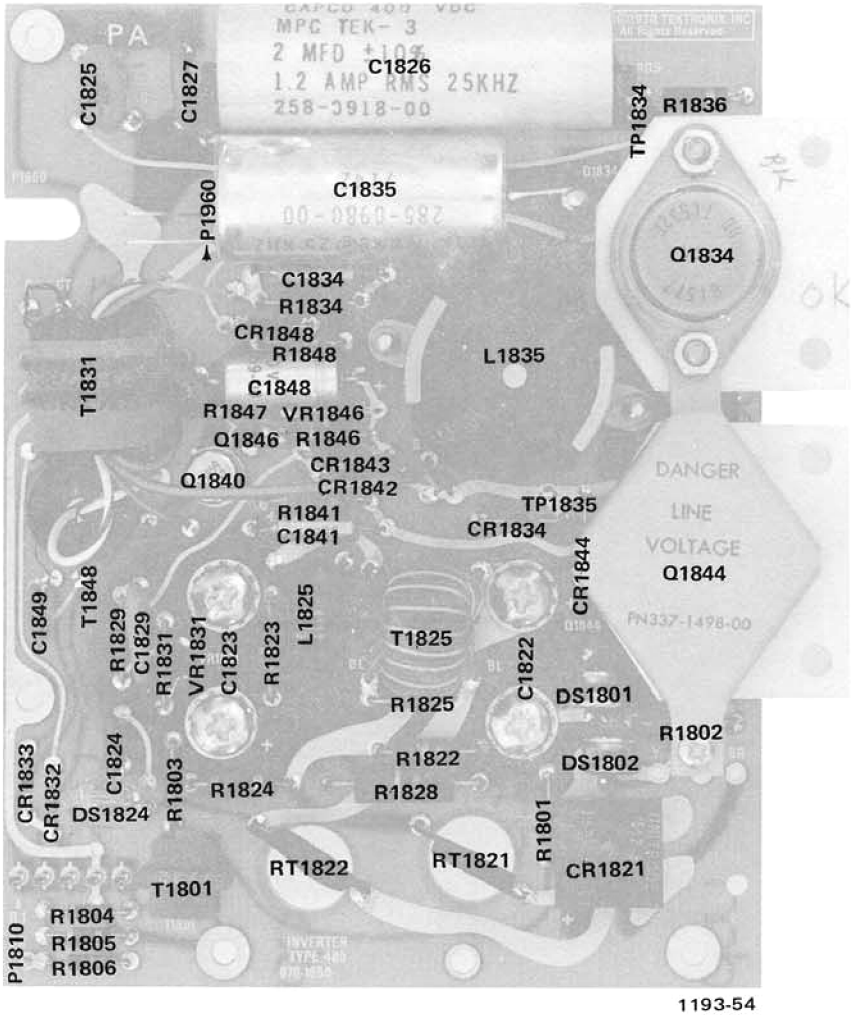

1193-54

Fig. 8-20. A14 Inverter board.

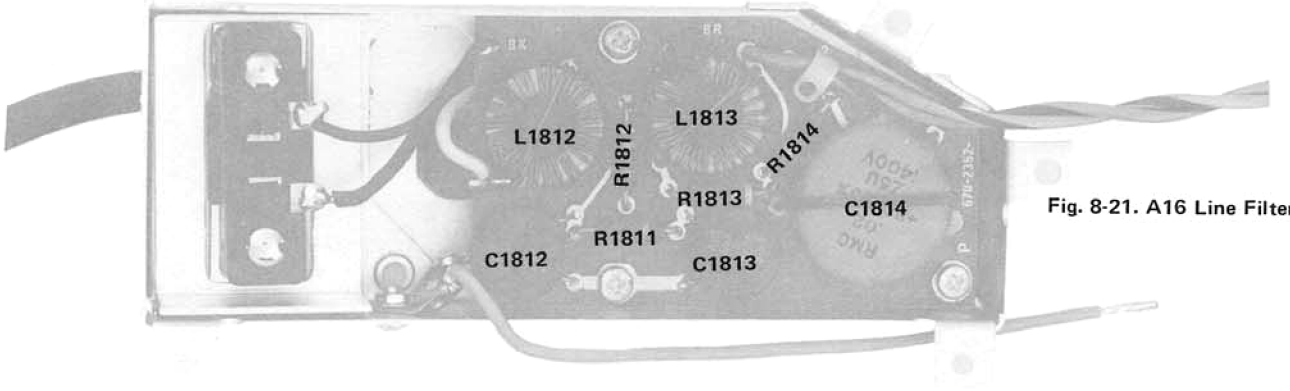

1193-55

Fig. 8-21. A16 Line Filter board.

http://manoman.sqhill.com

WARNING

LINE AC AND STORED DC POTENTIALS ARE PRESENT ON THE INVERTER CIRCUIT BOARD AND ON THE TRANSFORMER CIRCUIT BOARD. THE STORED DC REMAINS LONG AFTER INSTRUMENT POWER IS OFF. VERIFY THAT THE LINE CORD IS DISCONNECTED AND THE LINE STORAGE CAPACITORS, C1822 AND C1823, ARE COMPLETELY DISCHARGED BEFORE ATTEMPTING ANY REPAIRS OR OHMIC MEASUREMENTS. SEE MAINTENANCE SECTION (4) FOR TROUBLESHOOTING INSTRUCTIONS.

SEE PARTS LIST FOR EARLIER VALUES AND SERIAL NUMBER RANGES OF PARTS OUTLINED OR DEPICTED IN BLUE.

VOLTAGE CONDITIONS
'B' TIME/DIV—0.1 ms
'A' TIME/DIV—1 ms
HORIZ DISPLAY—ALT
SWEEP MODE—NORM
'A' TRIGGER SOURCE—INT
'A' TRIGGER COUPLING—AC
'B' TRIGGER SOURCE—B RUNS AFTER DELAY TIME
HORIZ POSITIONING—MIDR

TROUBLE SHOOTING TABLE AND WAVEFORMS GIVEN IN MAINTENANCE SECTION (4).

P/O TRANSFORMER BOARD

SUPPORT POST

PARTIAL A13 POWER BOARD

A14 INVERTER Y-BK BOARD

A16 LINE FILTER BOARD

485 OSCILLOSCOPE

REV. G, MAR, 1978
1193-56

POWER INVERTER 14

6KP

http://manuman.sqnn.com

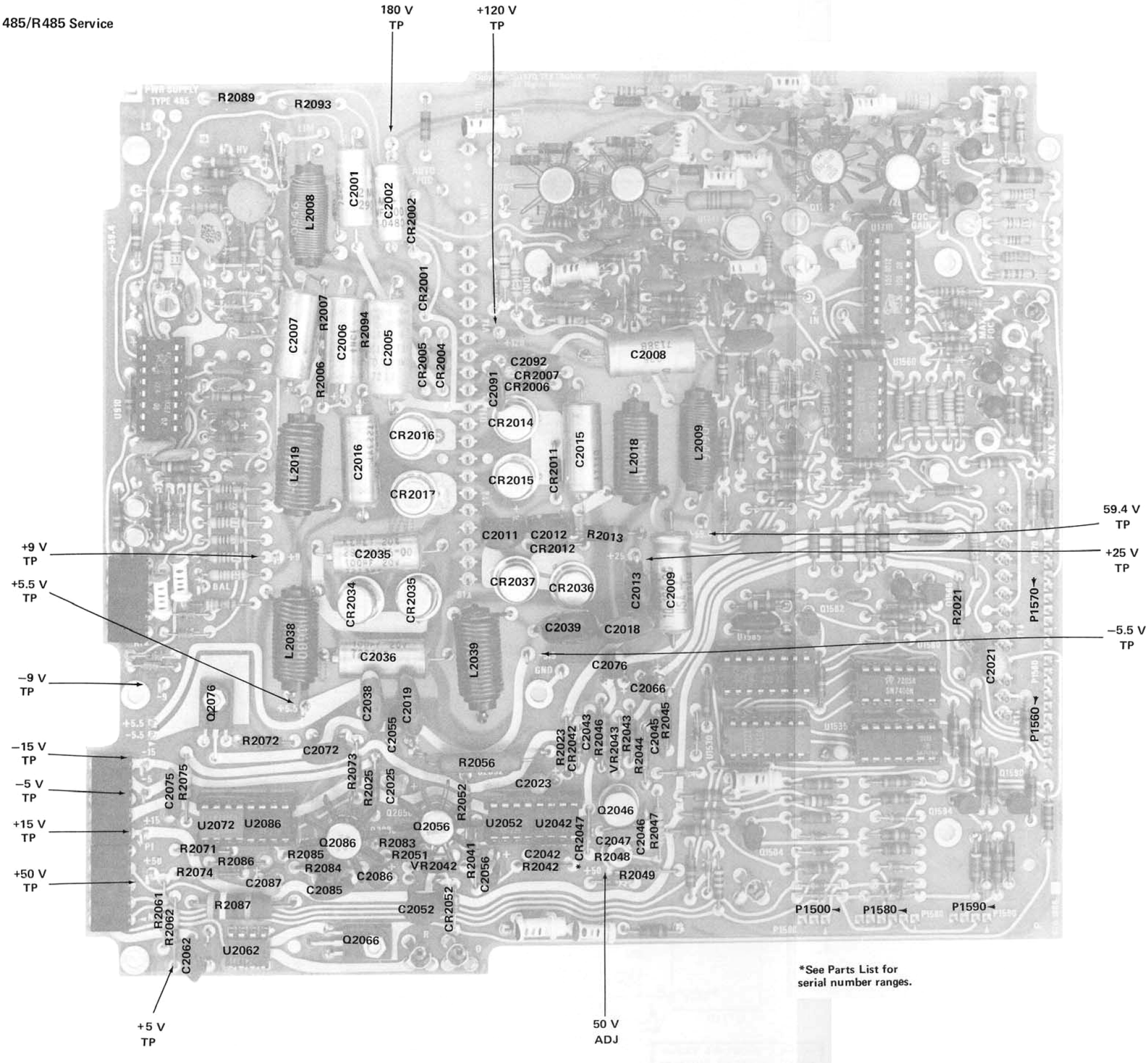

*See Parts List for serial number ranges.

Fig. 8-22. A13 Partial Power supply board.

http://manoman.sqhill.com

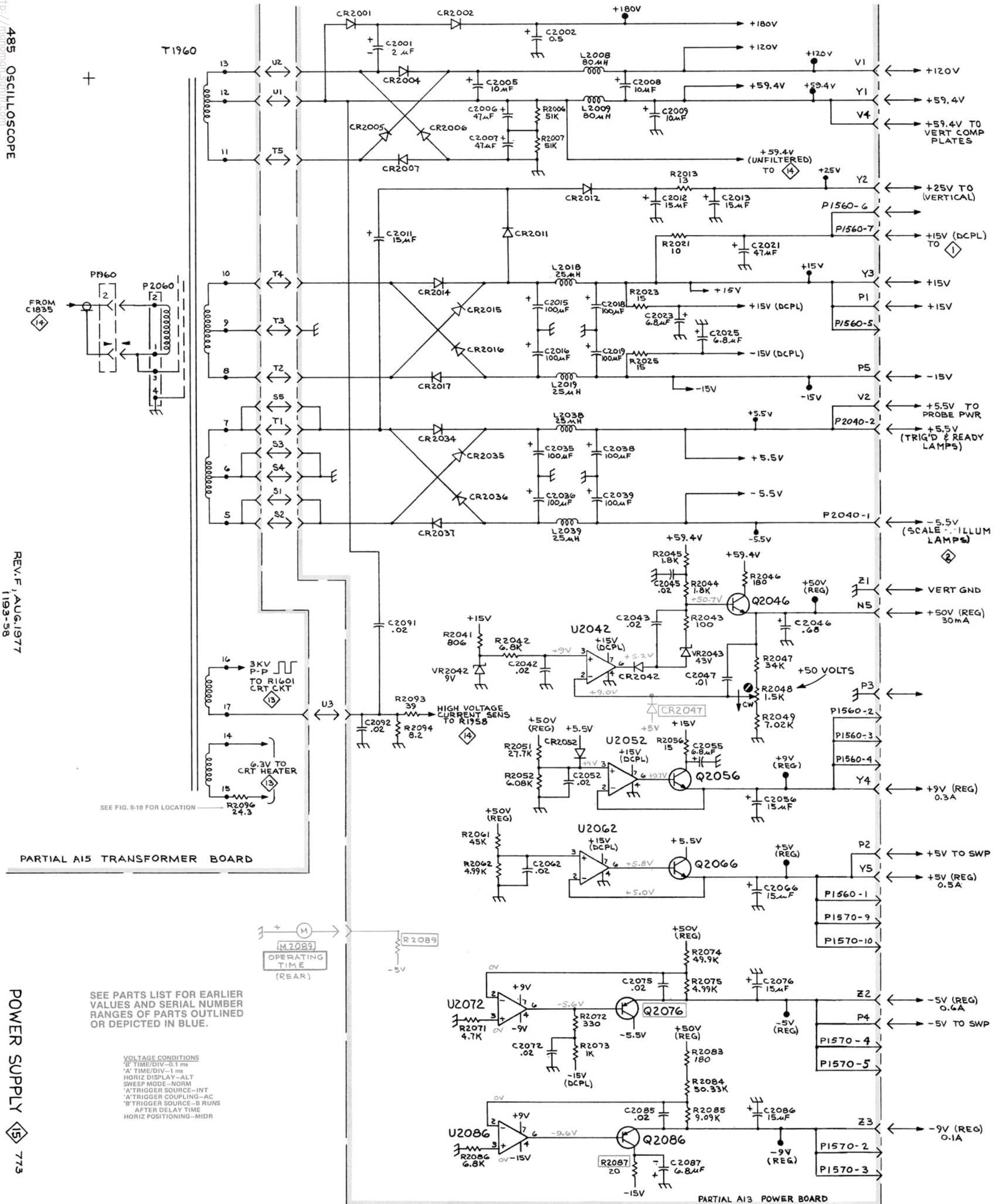

REV. F, AUG. 1977
1193-58

SEE PARTS LIST FOR EARLIER VALUES AND SERIAL NUMBER RANGES OF PARTS OUTLINED OR DEPICTED IN BLUE.

VOLTAGE CONDITIONS
'B' TIME/DIV—0.1 ms
'A' TIME/DIV—1 ms
HORIZ DISPLAY—ALT
SWEEP MODE—NORM
'A' TRIGGER SOURCE—INT
'A' TRIGGER COUPLING—AC
'B' TRIGGER SOURCE—B RUNS AFTER DELAY TIME
HORIZ POSITIONING—MIDR

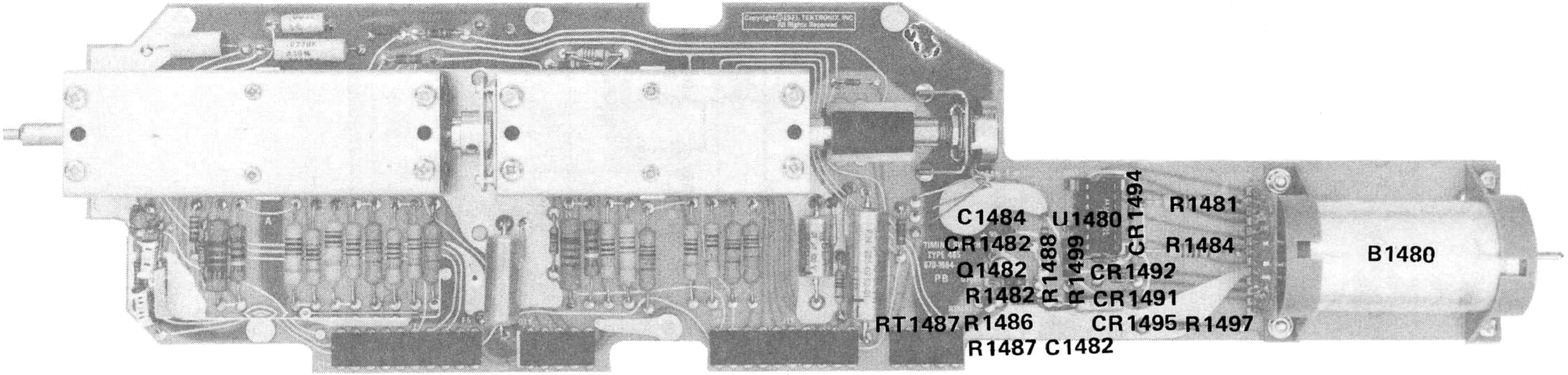

Fig. 8-23. A12 Partial Timing switch board.

http://manoman.sqhill.com

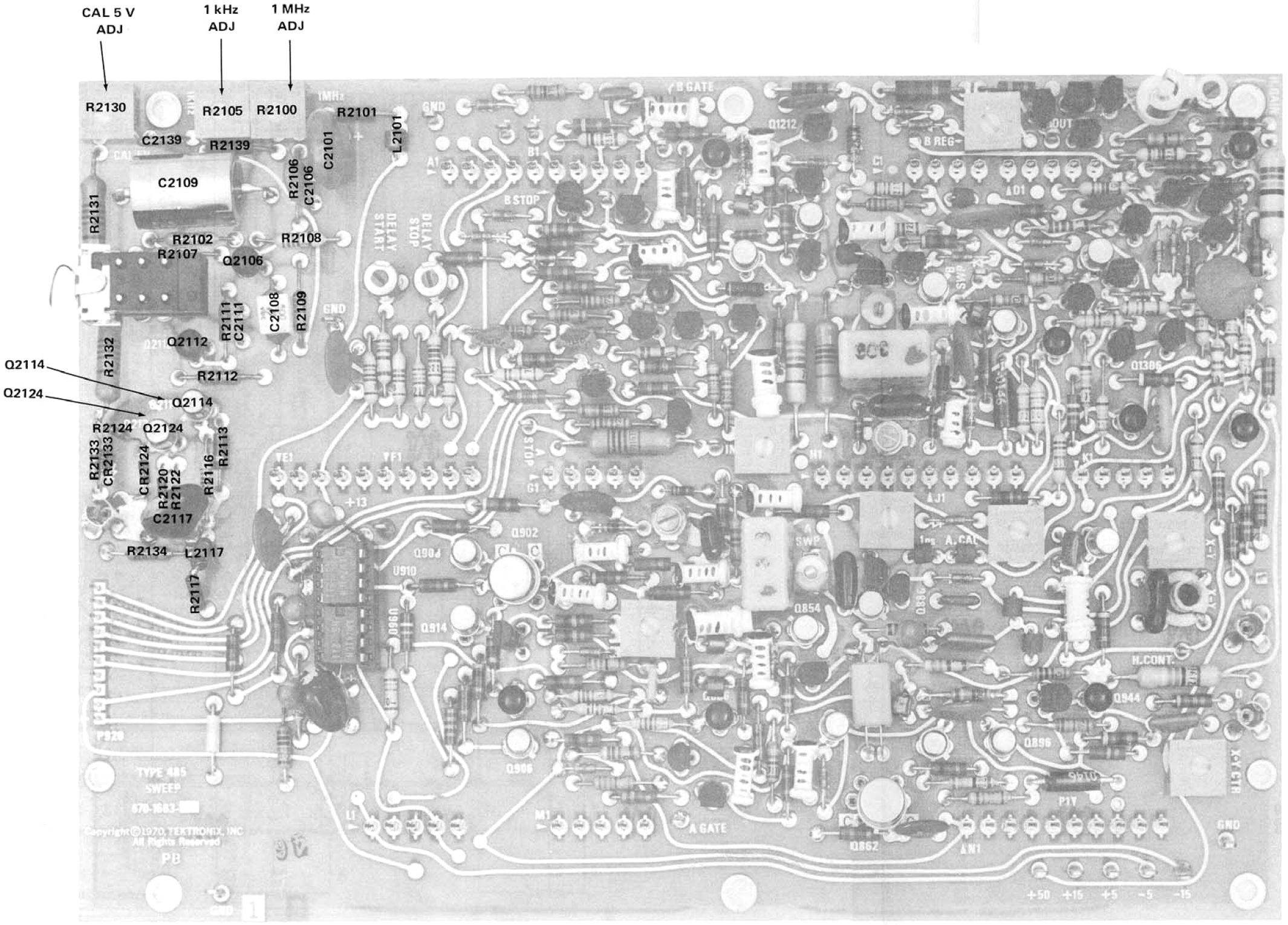

Fig. 8-24. A10 Partial Sweep board.

http://manoman.sqhill.com

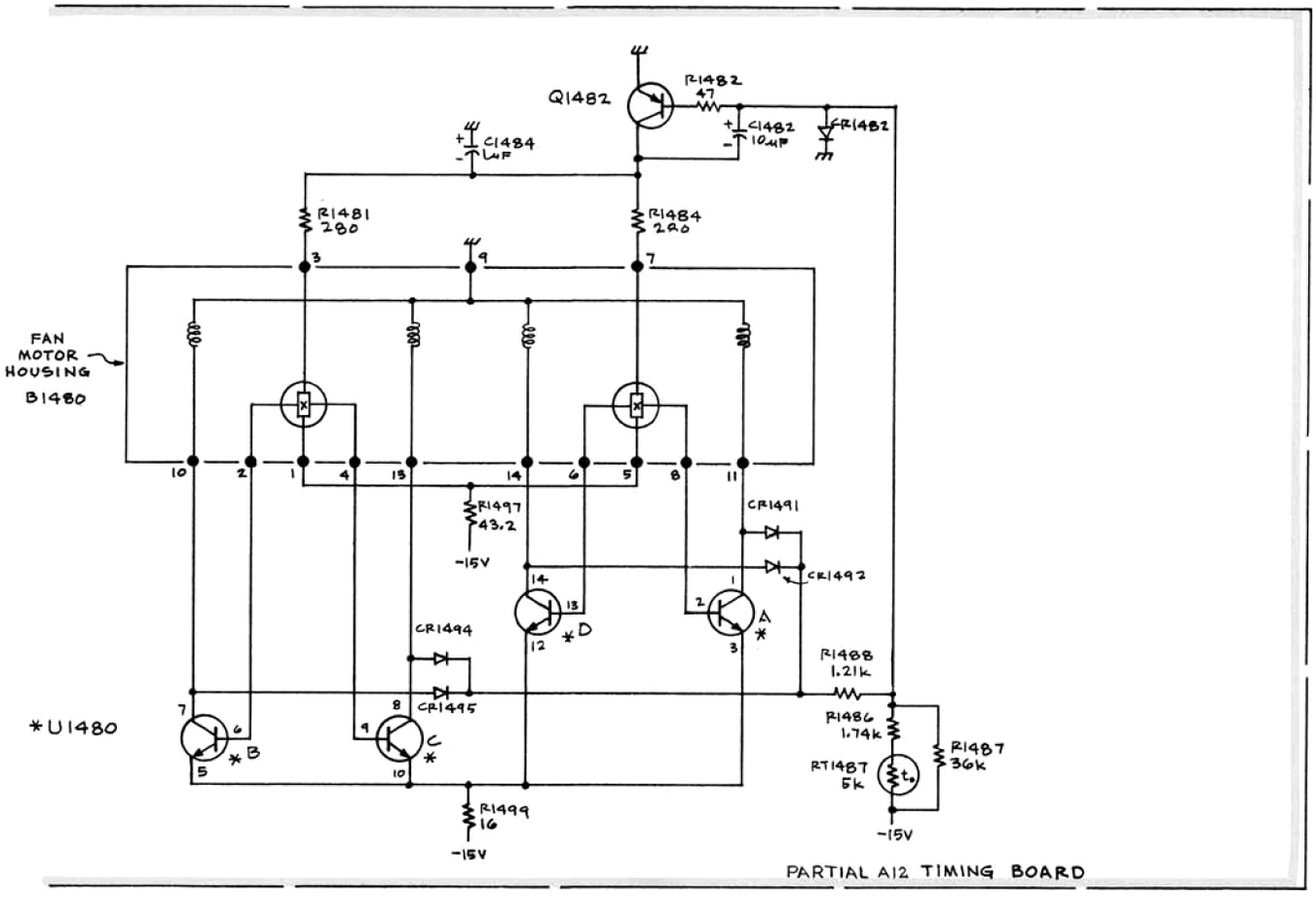

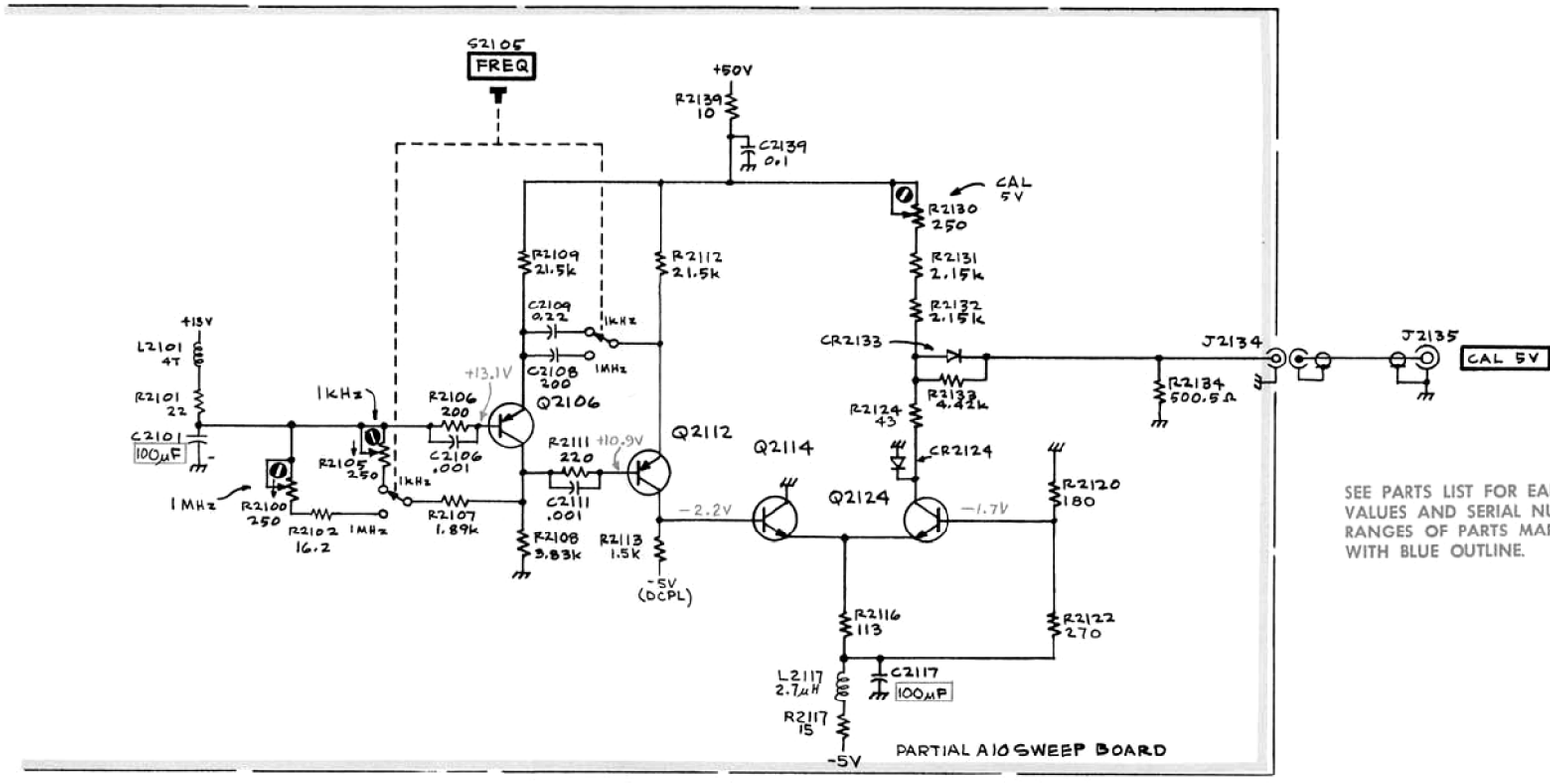

SEE PARTS LIST FOR EARLIER VALUES AND SERIAL NUMBER RANGES OF PARTS MARKED WITH BLUE OUTLINE.

http://manoman.sqhill.com

http://manoman.sqhill.com

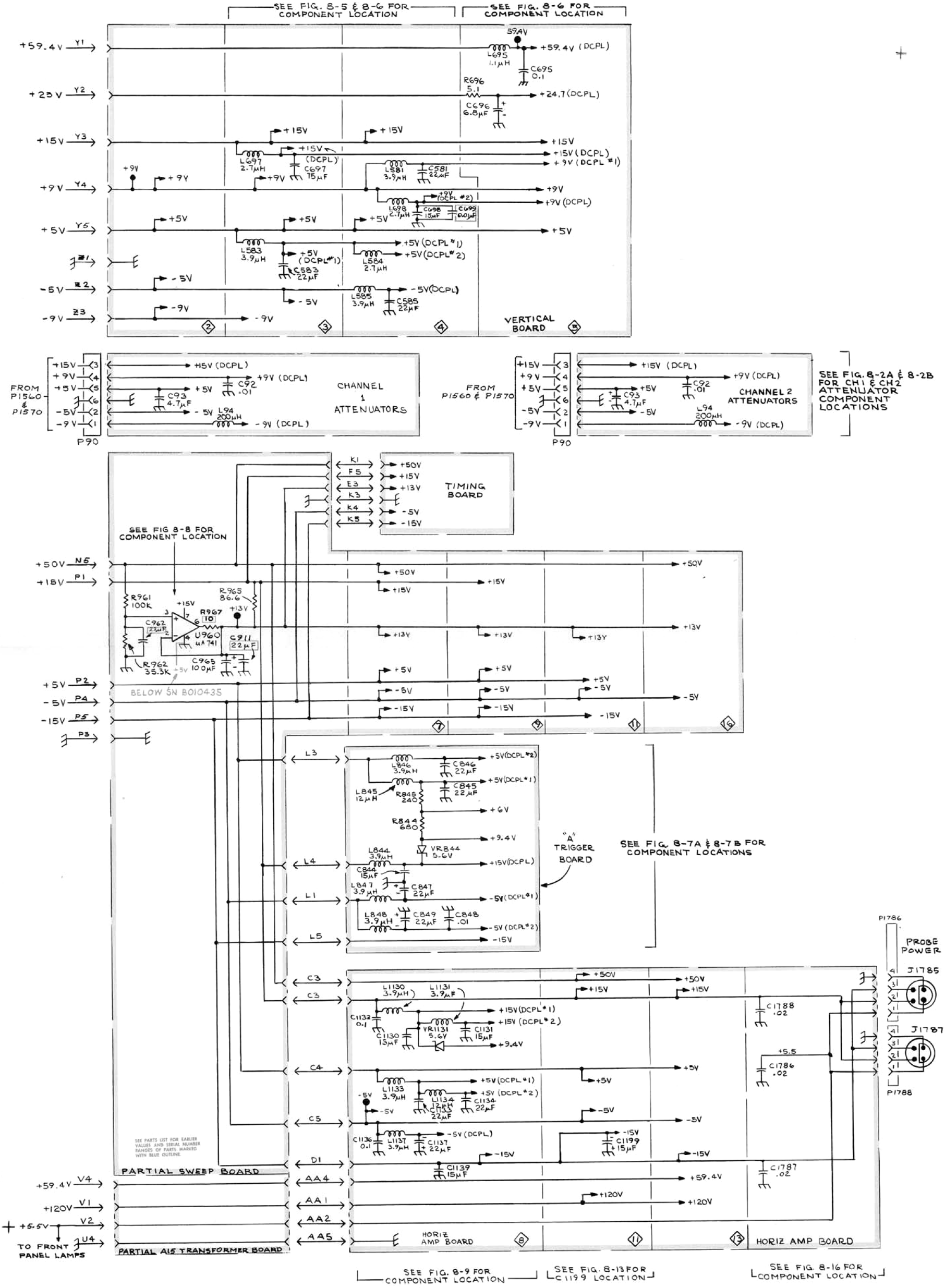

POWER DISTRIBUTION 17

REV. E, AUG. 1975
1183-62

EKP

REPLACEABLE MECHANICAL PARTS

PARTS ORDERING INFORMATION

Replacement parts are available from or through your local Tektronix, Inc. Field Office or representative.

Changes to Tektronix instruments are sometimes made to accommodate improved components as they become available, and to give you the benefit of the latest circuit improvements developed in our engineering department. It is therefore important, when ordering parts, to include the following information in your order: Part number, instrument type or number, serial number, and modification number if applicable.

If a part you have ordered has been replaced with a new or improved part, your local Tektronix, Inc. Field Office or representative will contact you concerning any change in part number.

Change information, if any, is located at the rear of this manual.

SPECIAL NOTES AND SYMBOLS

X000	Part first added at this serial number
00X	Part removed after this serial number

FIGURE AND INDEX NUMBERS

Items in this section are referenced by figure and index numbers to the illustrations.

INDENTATION SYSTEM

This mechanical parts list is indented to indicate item relationships. Following is an example of the indentation system used in the description column.

```
1 2 3 4 5                    Name & Description

Assembly and/or Component
Attaching parts for Assembly and/or Component
        - - - * - - -
    Detail Part of Assembly and/or Component
    Attaching parts for Detail Part
        - - - * - - -
        Parts of Detail Part
        Attaching parts for Parts of Detail Part
        - - - * - - -
```

Attaching Parts always appear in the same indentation as the item it mounts, while the detail parts are indented to the right. Indented items are part of, and included with, the next higher indentation. The separation symbol - - - * - - - indicates the end of attaching parts.

Attaching parts must be purchased separately, unless otherwise specified.

ITEM NAME

In the Parts List, an Item Name is separated from the description by a colon (:). Because of space limitations, an Item Name may sometimes appear as incomplete. For further Item Name identification, the U.S. Federal Cataloging Handbook H6-1 can be utilized where possible.

ABBREVIATIONS

"	INCH
#	NUMBER SIZE
ACTR	ACTUATOR
ADPTR	ADAPTER
ALIGN	ALIGNMENT
AL	ALUMINUM
ASSEM	ASSEMBLED
ASSY	ASSEMBLY
ATTEN	ATTENUATOR
AWG	AMERICAN WIRE GAGE
BD	BOARD
BRKT	BRACKET
BRS	BRASS
BRZ	BRONZE
BSHG	BUSHING
CAB	CABINET
CAP	CAPACITOR
CER	CERAMIC
CHAS	CHASSIS
CKT	CIRCUIT
COMP	COMPOSITION
CONN	CONNECTOR
COV	COVER
CPLG	COUPLING
CRT	CATHODE RAY TUBE
DEG	DEGREE
DWR	DRAWER
ELCTRN	ELECTRON
ELEC	ELECTRICAL
ELCTLT	ELECTROLYTIC
ELEM	ELEMENT
EPL	ELECTRICAL PARTS LIST
EQPT	EQUIPMENT
EXT	EXTERNAL
FIL	FILLISTER HEAD
FLEX	FLEXIBLE
FLH	FLAT HEAD
FLTR	FILTER
FR	FRAME or FRONT
FSTNR	FASTENER
FT	FOOT
FXD	FIXED
GSKT	GASKET
HDL	HANDLE
HEX	HEXAGON
HEX HD	HEXAGONAL HEAD
HEX SOC	HEXAGONAL SOCKET
HLCPS	HELICAL COMPRESSION
HLEXT	HELICAL EXTENSION
HV	HIGH VOLTAGE
IC	INTEGRATED CIRCUIT
ID	INSIDE DIAMETER
IDENT	IDENTIFICATION
IMPLR	IMPELLER
IN	INCH
INCAND	INCANDESCENT
INSUL	INSULATOR
INTL	INTERNAL
LPHLDR	LAMPHOLDER
MACH	MACHINE
MECH	MECHANICAL
MTG	MOUNTING
NIP	NIPPLE
NON WIRE	NOT WIRE WOUND
OBD	ORDER BY DESCRIPTION
OD	OUTSIDE DIAMETER
OVH	OVAL HEAD
PH BRZ	PHOSPHOR BRONZE
PL	PLAIN or PLATE
PLSTC	PLASTIC
PN	PART NUMBER
PNH	PAN HEAD
PWR	POWER
RCPT	RECEPTACLE
RES	RESISTOR
RGD	RIGID
RLF	RELIEF
RTNR	RETAINER
SCH	SOCKET HEAD
SCOPE	OSCILLOSCOPE
SCR	SCREW
SE	SINGLE END
SECT	SECTION
SEMICOND	SEMICONDUCTOR
SHLD	SHIELD
SHLDR	SHOULDERED
SKT	SOCKET
SL	SLIDE
SLFLKG	SELF-LOCKING
SLVG	SLEEVING
SPR	SPRING
SQ	SQUARE
SST	STAINLESS STEEL
STL	STEEL
SW	SWITCH
T	TUBE
TERM	TERMINAL
THD	THREAD
THK	THICK
TNSN	TENSION
TPG	TAPPING
TRH	TRUSS HEAD
V	VOLTAGE
VAR	VARIABLE
W/	WITH
WSHR	WASHER
XFMR	TRANSFORMER
XSTR	TRANSISTOR

http://manoman.sqhill.com

CROSS INDEX—MFR. CODE NUMBER TO MANUFACTURER

Mfr. Code	Manufacturer	Address	City, State, Zip
000BK	STAUFFER SUPPLY	103 SE TAYLOR	PORTLAND, OR 97219
0000A	LEMO USA	2015 2ND STREET	BERKLEY, CA 94710
00779	AMP, INC.	P O BOX 3608	HARRISBURG, PA 17105
01295	TEXAS INSTRUMENTS, INC., SEMICONDUCTOR GROUP	P O BOX 5012, 13500 N CENTRAL EXPRESSWAY	DALLAS, TX 75222
05091	TRI-ORDINATE CORPORATION	343 SNYDER AVENUE	BERKELEY HEIGHTS, NJ 07922
05129	KILO ENGINEERING COMPANY	2015 D	LA VERNE, CA 91750
05820	WAKEFIELD ENGINEERING, INC.	AUDUBON ROAD	WAKEFIELD, MA 01880
06540	AMATOM ELECTRONIC HARDWARE, DIV. OF MITE CORP.	446 BlAKE ST.	NEW HAVEN, CT 06515
06666	GENERAL DEVICES CO., INC.	525 S. WEBSTER AVE.	INDIANAPOLIS, IN 46219
08261	SPECTRA-STRIP CORP.	7100 LAMPSON AVE.	GARDEN GROVE, CA 92642
12327	FREEWAY CORPORATION	9301 ALLEN DRIVE	CLEVELAND, OH 44125
12360	ALBANY PRODUCTS CO., DIV. OF PNEUMO DYNAMICS CORPORATION	145 WOODWARD AVENUE	SOUTH NORWALK, CT 06586
12697	CLAROSTAT MFG. CO., INC.	LOWER WASHINGTON STREET	DOVER, NH 03820
14438	USM CORP., NYLOK FASTERNER DIV.	3730 W. MORSE	LINCOLNWOOD, IL 60645
18583	CURTIS INSTRUMENTS, INC.	200 KISCO AVE.	MOUNT KISCO, NY 10549
22526	BERG ELECTRONICS, INC.	YOUK EXPRESSWAY	NEW CUMBERLAND, PA 17070
23050	PRODUCT COMPONENTS CORP	30 LORRAINE AVE.	MT VERNON, NY 10553
24931	SPECIALTY CONNECTOR CO., INC.	3560 MADISON AVE.	INDIANAPOLIS, IN 46227
25088	SIEMENS CORP.	186 WOOD AVE. S	ISELIN, NJ 08830
28520	HEYMAN MFG. CO.	147 N. MICHIGAN AVE.	KENILWORTH, NJ 07033
28817	CAL-METEX CORP., SUBSIDIARY OF METEX CORP.	509 HINDRY AVE.	INGLEWOOD, CA 90301
42838	NATIONAL RIVET AND MFG. CO.	1-21 EAST JEFFERSON ST.	WAUPUN, WI 53963
55210	GETTIG ENG. AND MFG. COMPANY	PO BOX 85, OFF ROUTE 45	SPRING MILLS, PA 16875
63743	WARD LEONARD ELECTRIC CO., INC.	31 SOUTH ST.	MOUNT VERNON, NY 10550
70276	ALLEN MFG. CO.	P. O. DRAWER 570	HARTFORD, CT 06101
70278	ALLIED STEEL AND CONVEYORS, DIV. OF SPARTON CORP.	17333 HEALY	DETROIT, MI 48212
70485	ATLANTIC INDIA RUBBER WORKS, INC.	571 W. POLK ST.	CHICAGO, IL 60607
71159	BRISTOL SOCKET SCREW, DIV. OF AMERICAN CHAIN AND CABLE CO., INC.	P O BOX 2244, 40 BRISTOL ST.	WATERBURY, CT 06720
71279	CAMBRIDGE THERMIONIC CORP.	445 CONCORD AVE.	CAMBRIDGE, MA 02138
71590	CENTRALAB ELECTRONICS, DIV. OF GLOBE-UNION, INC.	P O BOX 858	FORT DODGE, IA 50501
71785	TRW, CINCH CONNECTORS	1501 MORSE AVENUE	ELK GROVE VILLAGE, IL 60007
73743	FISCHER SPECIAL MFG. CO.	446 MORGAN ST.	CINCINNATI, OH 45206
73803	TEXAS INSTRUMENTS, INC., METALLURGICAL MATERIALS DIV.	34 FOREST STREET	ATTLEBORO, MA 02703
74445	HOLO-KROME CO.	31 BROOK ST. WEST	HARTFORD, CT 06110
78189	ILLINOIS TOOL WORKS, INC. SHAKEPROOF DIVISION	ST. CHARLES ROAD	ELGIN, IL 60120
79136	WALDES, KOHINOOR, INC.	47-16 AUSTEL PLACE	LONG ISLAND CITY, NY 11101
79807	WROUGHT WASHER MFG. CO.	2100 S. O BAY ST.	MILWAUKEE, WI 53207
80009	TEKTRONIX, INC.	P O BOX 500	BEAVERTON, OR 97077
81073	GRAYHILL, INC.	561 HILLGROVE AVE., PO BOX 373	LA GRANGE, IL 60525
82104	STANDARD GRIGSBY CO., DIV. OF SUN CHEMICAL CORPORATION	920 RATHBONE AVENUE	AURORA, IL 60507
82389	SWITCHCRAFT, INC.	5555 N. ELSTON AVE.	CHICAGO, IL 60630
82647	TEXAS INSTRUMENTS, INC., CONTROL PRODUCTS DIV.	34 FOREST ST.	ATTLEBORO, MA 02703
83385	CENTRAL SCREW CO.	2530 CRESCENT DR.	BROADVIEW, IL 60153
83907	ACCURATE RUBBER PRODUCTS CO.	123 N. RACINE	CHICAGO, IL 60607
86445	PENN FIBRE AND SPECIALTY CO., INC.	2032 E. WESTMORELAND ST.	PHILADELPHIA, PA 19134
86928	SEASTROM MFG. COMPANY, INC.	701 SONORA AVENUE	GLENDALE, CA 91201
87308	N. L. INDUSTRIES, INC., SOUTHERN SCREW DIV.	P. O. BOX 1360	STATESVILLE, NC 28677
88245	LITTON SYSTEMS, INC., USECO DIV.	13536 SATICOY ST.	VAN NUYS, CA 91409
89265	DELETED, REPLACED BY 77342		
91836	KINGS ELECTRONICS CO., INC.	40 MARBLEDALE ROAD	TUCKAHOE, NY 10707
93410	ESSEX INTERNATIONAL, INC., CONTROLS DIV. LEXINGTON PLANT	P. O. BOX 1007	MANSFIELD, OH 44903
95987	WECKESSER CO., INC.	4444 WEST IRVING PARK RD.	CHICAGO, IL 60641
97464	INDUSTRIAL RETAINING RING CO.	57 CORDIER ST.	IRVINGTON, NJ 07111
98159	RUBBER TECK, INC.	19115 HAMILTON AVE., P O BOX 389	GARDENA, CA 90247

http://manoman.sqhill.com

Fig. & Index No.	Tektronix Part No.	Serial/Model No. Eff	Dscont	Qty	1 2 3 4 5	Name & Description	Mfr Code	Mfr Part Number
1-1	200-1268-01			1		ADAPTER,CAMERA:	80009	200-1268-01
						(ATTACHING PARTS)		
-2	211-0195-00			4		SCREW,MACHINE:4-40 X 0.875 INCH,STL	83385	OBD
						- - - * - - -		
	337-1497-00	B010100	B010149X	1		SHLD,IMPLOSION:	80009	337-1497-00
-3	331-0295-00			1		MASK,CRT SCALE:GRATICULE	80009	331-0295-00
-4	366-1166-00			1		KNOB:RED	80009	366-1166-00
	213-0153-00			1		. SETSCREW:5-40 X 0.125 INCH,HEX SOC STL	74445	OBD
-5	366-1338-00			1		KNOB:GRAY	80009	366-1338-00
	213-0153-00			2		. SETSCREW:5-40 X 0.125 INCH,HEX SOC STL	74445	OBD
-6	366-1168-00			1		KNOB:BLACK CAP AND RED BODY	80009	366-1168-00
	213-0153-00			1		. SETSCREW:5-40 X 0.125 INCH,HEX SOC STL	74445	OBD
-7	366-1385-00	B010100	B089999	1		KNOB:GRAY	80009	366-1385-00
	366-1385-01	B090000	B142149	1		KNOB:GRAY	80009	366-1385-01
	366-1385-00	B142150		1		KNOB:GRAY	80009	366-1385-00
	213-0243-00	B010100	B089999	2		. SETSCREW:5-40 X 0.25 INCH,HEX SOC STL	70276	OBD
	377-0293-01	B090000	B142149	1		. INSERT,KNOB:INTERLOCKING	80009	377-0293-01
	213-0243-00	B142150		2		. SETSCREW:5-40 X 0.25 INCH,HEX SOC STL	70276	OBD
-8	354-0413-00			1		RING,KNOB SKIRT:1.75 INCH OD,PLASTIC	80009	354-0413-00
	213-0218-00			1		. SETSCREW:6-32 X 0.25 INCH,HEX SOC STL	74445	OBD
-9	366-1166-00			1		KNOB:RED	80009	366-1166-00
	213-0153-00			1		. SETSCREW:5-40 X 0.125 INCH,HEX SOC STL	74445	OBD
-10	366-1338-00			1		KNOB:GRAY	80009	366-1338-00
	213-0153-00			1		. SETSCREW:5-40 X 0.125 INCH,HEX SOC STL	74445	OBD
-11	366-0494-00			1		KNOB:GRAY	80009	366-0494-00
	213-0153-00			1		. SETSCREW:5-40 X 0.125 INCH,HEX SOC STL	74445	OBD
-12	366-0494-00			1		KNOB:GRAY	80009	366-0494-00
	213-0153-00			1		. SETSCREW:5-40 X 0.125 INCH,HEX SOC STL	74445	OBD
-13	366-0494-00			1		KNOB:GRAY	80009	366-0494-00
	213-0153-00			1		. SETSCREW:5-40 X 0.125 INCH,HEX SOC STL	74445	OBD
-14	366-0215-02			7		KNOB:LEVER SWITCH	80009	366-0215-02
-15	366-0494-00			1		KNOB:GRAY	80009	366-0494-00
	213-0153-00			1		. SETSCREW:5-40 X 0.125 INCH,HEX SOC STL	74445	OBD
-16	366-0494-00			1		KNOB:GRAY	80009	366-0494-00
	213-0153-00			1		. SETSCREW:5-40 X 0.125 INCH,HEX SOC STL	74445	OBD
-17	366-1391-00			1		KNOB:GRAY	80009	366-1391-00
	213-0239-00			1		. SETSCREW:3-48 X 0.062 INCH,HEX SOC STL	71159	OBD
-18	366-1315-00			1		KNOB:GRAY	80009	366-1315-00
	213-0153-00			1		. SETSCREW:5-40 X 0.125 INCH,HEX SOC STL	74445	OBD
-19	366-0494-00			1		KNOB:GRAY	80009	366-0494-00
	213-0153-00			1		. SETSCREW:5-40 X 0.125 INCH,HEX SOC STL	74445	OBD
-20	366-0392-00			1		KNOB:GRAY	80009	366-0392-00
-21	366-1391-00			1		KNOB:GRAY	80009	366-1391-00
	213-0239-00			1		. SETSCREW:3-48 X 0.062 INCH,HEX SOC STL	71159	OBD
-22	366-1315-00			1		KNOB:GRAY	80009	366-1315-00
	213-0153-00			1		. SETSCREW:5-40 X 0.125 INCH,HEX SOC STL	74445	OBD
-23	331-0328-00			1		DIAL,CONTROL:10 TURN FOR 0.25 DIA SHAFT	05129	461-S-70
	213-0048-00			1		. SETSCREW:4-40 X 0.125 INCH,HEX SOC STL	74445	OBD
-24	366-0494-00			1		KNOB:GRAY	80009	366-0494-00
	213-0153-00			1		. SETSCREW:5-40 X 0.125 INCH,HEX SOC STL	74445	OBD
-25	426-0785-00			17		FR,PUSH BUTTON:GRAY PLASTIC	80009	426-0785-00
-26	378-0690-03			1		LENS,LIGHT:AMBER--20MHZ	80009	378-0690-03
-27	378-0690-04			2		LENS,LIGHT:AMBER--RESET	80009	378-0690-04
-28	378-0690-05			1		LENS,LIGHT:AMBER--READY	80009	378-0690-05
-29	378-0690-06			1		LENS,LIGHT:AMBER--TRIG'D	80009	378-0690-06
-30	358-0301-02			2		BUSHING,SLEEVE:GRAY PLASTIC	80009	358-0301-02
-31	358-0378-00			2		BUSHING,SLEEVE:PRESS MOUNT	80009	358-0378-00
	129-0053-00			1		POST,BDG,ELEC:UNINSULATED	80009	129-0053-00
-32	355-0507-00			1		. STUD,SHOULDERED:BINDING POST	80009	355-0507-00
-33	200-0103-00			1		. NUT,PLAIN,KNURL:0.25-28 X 0.375" OD,BRASS	80009	200-0103-00
						(ATTACHING PARTS)		
-34	210-0583-00			1		NUT,PLAIN,HEX.:0.25-32 X 0.312 INCH,BRS	73743	2X20224-402
-35	210-0046-00			1		WASHER,LOCK:INTL,0.26 ID X 0.40" OD,STL	78189	1214-05-00-0541C
						- - - * - - -		

http://manoman.sqhill.com

Fig. & Index No.	Tektronix Part No.	Serial/Model No. Eff	Dscont	Qty	1 2 3 4 5	Name & Description	Mfr Code	Mfr Part Number
1-36	333-1476-00			1		PANEL,FRONT:485	80009	333-1476-00
	333-1476-01			1		PANEL,FRONT:485-1	80009	333-1476-01
	333-1476-02			1		PANEL,FRONT:485-2	80009	333-1476-02
-37	352-0299-00			1		LAMPHOLDER:GRATICULE	80009	352-0299-00
-38	352-0277-00			3		LAMPHOLDER:	80009	352-0277-00
-39	200-0935-00			3		BASE,LAMPHOLDER:0.29 OD X 0.19 CASE	80009	200-0935-00
-40	401-0080-00			1		BRG,KNOB SKIRT:0.789 ID X 0.866"OD PLASTIC	80009	401-0080-00
-41	----- -----			3		RES.,VAR:(R290,R1569,R1570 EPL)		
						(ATTACHING PARTS FOR EACH)		
-42	210-0583-00			1		NUT,PLAIN,HEX.:0.25-32 X 0.312 INCH,BRS	73743	2X20224-402
-43	210-0046-00			1		WASHER,LOCK:INTL,0.26 ID X 0.40" OD,STL	78189	1214-05-00-0541C
						- - - * - - -		
-44	366-1351-01			1		PUSH BUTTON:--BW LIMIT	80009	366-1351-01
-45	366-1351-03			1		PUSH BUTTON:--BEAM FINDER	80009	366-1351-03
-46	260-1315-00			1		SWITCH,PUSH:2 BUTTON	71590	2KBM020000-529
						(ATTACHING PARTS)		
-47	211-0022-00			2		SCREW,MACHINE:2-56 X 0.188 INCH,PNH STL	83385	OBD
-48	210-0405-00			1		NUT,PLAIN,HEX.:2-56 X 0.188 INCH,BRS	73743	2X12157-402
-49	210-0001-00			1		WASHER,LOCK:INTL,0.092 ID X 0.18"OD,STL	78189	1202-00-00-0541C
-50	386-2050-00			1		PLATE,SW MTG:PUSHBUTTON	80009	386-2050-00
						- - - * - - -		
-51	----- -----			2		RES.,VAR:(SEE R220,R230 EPL)		
						(ATTACHING PARTS FOR EACH)		
-52	358-0409-00			1		BSHG,MACH.THD:0.25-32 X 0.159 ID X 0.24	80009	358-0409-00
-53	210-0046-00			2		WASHER,LOCK:INTL,0.26 ID X 0.40" OD,STL	78189	1214-05-00-0541C
-54	210-0471-00			1		NUT,SLEEVE:HEX.,0.312 X 0.594 INCH LONG	80009	210-0471-00
-55	210-0223-00			1		TERMINAL,LUG:0.25 INCH DIA,SE	86928	A313-136
						- - - * - - -		
-56	260-0735-00			1		SWITCH,PUSH:SPST	81073	39-1
-57	----- -----[1]			1		RES.,VAR:(SEE R920 EPL)		
-58	----- -----			1		RES.,VAR:(SEE R720 EPL)		
						(ATTACHING PARTS)		
-59	210-0583-00			1		NUT,PLAIN,HEX.:0.25-32 X 0.312 INCH,BRS	73743	2X20224-402
						- - - * - - -		
-60	260-0816-01			1		SWITCH,SLIDE:DPDT,0.5A,125V	80009	260-0816-01
						(ATTACHING PARTS)		
-61	210-0405-00			2		NUT,PLAIN,HEX.:2-56 X 0.188 INCH,BRS	73743	2X12157-402
-62	210-0001-00			2		WASHER,LOCK:INTL,0.092 ID X 0.18"OD,STL	78189	1202-00-00-0541C
						- - - * - - -		
-63	366-1381-01			1		PUSH BUTTON:--POWER	80009	366-1381-01
-64	384-1060-00			1		EXTENSION SHAFT:7.831 INCH LONG	80009	384-1060-00
-65	131-0955-00			2		CONNECTOR,RCPT,:BNC,FEMALE,W/HARDWARE	05091	31-279
						(ATTACHING PARTS FOR EACH)		
-66	210-0590-00			1		NUT,PLAIN,HEX.:0.375 X 0.438 INCH,STL	73743	2X28269-402
-67	210-0012-00			1		WASHER,LOCK:INTL,0.375 ID X 0.50" OD STL	78189	1220-02-00-0541C
-68	210-0207-00			1		TERMINAL,LUG:0.375 INCH DIAMETER	12697	01136902
						- - - * - - -		
	198-2445-00			1		WIRE SET,ELEC:FOR SUBPANEL ASSEMBLY	80009	198-2445-00
-69	131-0818-00			1		. CONNECTOR,RCPT,:BNC,FEMALE	91836	KC19-153BNC
						(ATTACHING PARTS)		
-70	210-0590-00			1		. NUT,PLAIN,HEX.:0.375 X 0.438 INCH,STL	73743	2X28269-402
-71	210-0012-00			1		. WASHER,LOCK:INTL,0.375 ID X 0.50" OD STL	78189	1220-02-00-0541C
						- - - * - - -		
-72	210-0774-00			1		. EYELET,METALLIC:0.152 OD X 0.245 INCH L,BRS	80009	210-0774-00
-73	210-0775-00			1		. EYELET,METALLIC:0.126 OD X 0.23 INCH L,BRS	80009	210-0775-00
-74	----- -----			1		RES.,VAR:(SEE R450 EPL)		
						(ATTACHING PARTS)		
	213-0048-00			1		SETSCREW:4-40 X 0.125 INCH,HEX SOC STL	74445	OBD
						- - - * - - -		
-75	----- -----			1		RES.,VAR:(SEE R898 EPL)		
						(ATTACHING PARTS)		
-76	210-0583-00			1		NUT,PLAIN,HEX.:0.25-32 X 0.312 INCH,BRS	73743	2X20224-402
-77	210-0046-00			1		WASHER,LOCK:INTL,0.26 ID X 0.40" OD,STL	78189	1214-05-00-0541C
						- - - * - - -		

[1] 485 only

http://manoman.sqhill.com

Fig. & Index No.	Tektronix Part No.	Serial/Model No. Eff	Dscont	Qty	1 2 3 4 5	Name & Description	Mfr Code	Mfr Part Number
1-78	----- -----			1		RES.,VAR:(SEE R1300 EPL)		
						(ATTACHING PARTS)		
-79	210-0583-00			1		NUT,PLAIN,HEX.:0.25-32 X 0.312 INCH,BRS	73743	2X20224-402
-80	210-0940-00			1		WASHER,FLAT:0.25 ID X 0.375 INCH OD,STL	79807	OBD
						- - - * - - -		
-81	366-1351-02			1		PUSH BUTTON:--FREQ	80009	366-1351-00
-82	384-1099-00			1		EXTENSION SHAFT:PUSH BUTTON,1.54 INCH LONG	80009	384-1099-00
-83	----- -----			1		RES.,VAR:(SEE R1020 EPL)		
						(ATTACHING PARTS)		
-84	210-0583-00			1		NUT,PLAIN,HEX.:0.25-32 X 0.312 INCH,BRS	73743	2X20224-402
						- - - * - - -		
-85	366-1351-12			1		PUSH BUTTON:--CH1	80009	366-1351-12
-86	366-1351-05			1		PUSH BUTTON:--ALT	80009	366-1351-05
-87	366-1351-13			1		PUSH BUTTON:--CHOP	80009	366-1351-13
-88	366-1351-14			1		PUSH BUTTON:--ADD	80009	366-1351-14
-89	366-1351-09			1		PUSH BUTTON:--X-Y	80009	366-1351-09
-90	366-1351-04			1		PUSH BUTTON:--CH2	80009	366-1351-04
-91	384-1101-00			6		EXTENSION SHAFT:4.14 INCH LONG	80009	384-1101-00
-92	260-1319-00			1		SWITCH,PUSH:6 BUTTON,INTERLOCK	80009	260-1319-00
						(ATTACHING PARTS)		
-93	213-0138-00			4		SCR,TPG,THD FOR:4-40 X 0.188 INCH,PNH STL	83385	OBD
						- - - * - - -		
-94	366-1351-11			1		PUSH BUTTON:--NORM	80009	366-1351-11
-95	366-1351-12			1		PUSH BUTTON:--CH1	80009	366-1351-12
-96	366-1351-04			1		PUSH BUTTON:--CH2	80009	366-1351-04
-97	384-1100-00			3		EXTENSION SHAFT:0.13 SQ X 6.215" LONG,PLSTC	80009	384-1100-00
-98	260-1317-00			1		SWITCH,PUSH:3 BUTTON,2 POLE,INTERLOCK	80009	260-1317-00
						(ATTACHING PARTS)		
-99	220-0413-00			2		NUT,SLEEVE:4-40 X 0.562 INCH LONG	80009	220-0413-00
						- - - * - - -		
-100	366-1351-08			1		PUSH BUTTON:--A	80009	366-1351-08
-101	366-1351-06			1		PUSH BUTTON:--INTEN	80009	366-1351-06
-102	366-1351-05			1		PUSH BUTTON:--ALT	80009	366-1351-05
-103	366-1351-15			1		PUSH BUTTON:--B	80009	366-1351-15
-104	260-1318-00			1		SWITCH,PUSH:4 BUTTON,2 POLE,INTERLOCK	80009	260-1318-00
						(ATTACHING PARTS)		
-105	211-0159-00			1		SCREW,MACHINE:2-56 X 0.375 INCH,PNH STL	87308	OBD
-106	361-0407-00			1		SPACER,SLEEVE:0.125 OD X 0.193 INCH LONG	80009	361-0407-00
	211-0022-00			1		SCREW,MACHINE:2-56 X 0.188 INCH,PNH STL	83385	OBD
						- - - * - - -		
-107	348-0031-00			1		GROMMET,PLASTIC:0.156 INCH DIA	80009	348-0031-00
-108	220-0547-01			2		NUT,BLOCK:0.38 X 0.25 X 0.282"OA	80009	220-0547-01
						(ATTACHING PARTS)		
-109	211-0007-00			2		SCREW,MACHINE:4-40 X 0.188 INCH,PNH STL	83385	OBD
						- - - * - - -		
-110	407-0972-00			1		BRKT,CMPNT MTG:ATTEN	80009	407-0972-00
						(ATTACHING PARTS)		
-111	211-0105-00			3		SCREW,MACHINE:4-40 X 0.188"100 DEG,FLH STL	83385	OBD
-112	210-0586-00			1		NUT,PLAIN,EXT W:4-40 X 0.25 INCH,STL	78189	OBD
						- - - * - - -		
-113	426-0805-01			1		FRAME PANEL,CAB:FRONT SUB	80009	426-0805-01
-114	260-1395-00			1		SWITCH,ROTARY:A SOURCE	82104	260-1395-00
						(ATTACHING PARTS)		
-115	210-0406-00			2		NUT,PLAIN,HEX.:4-40 X 0.188 INCH,BRS	73743	2X12161-402
-116	210-0004-00			2		WASHER,LOCK:INTL,0.12 ID X 0.26"OD,STL	78189	1204-00-00-0541C
						- - - * - - -		
-117	260-1312-00			1		SWITCH,LEVER:1 SECT,4 POSN,22.5 DEG	80009	260-1312-00
						(ATTACHING PARTS)		
	210-0406-00			2		NUT,PLAIN,HEX.:4-40 X 0.188 INCH,BRS	73743	2X12161-402
	210-0004-00			2		WASHER,LOCK:INTL,0.12 ID X 0.26"OD,STL	78189	1204-00-00-0541C
						- - - * - - -		

http://manoman.sqhill.com

Fig. & Index No.	Tektronix Part No.	Serial/Model No. Eff	Dscont	Qty	1 2 3 4 5	Name & Description	Mfr Code	Mfr Part Number
1-118	260-1313-00			1		SWITCH,LEVER:1 SECT,4 POSN22.5 DEG	80009	260-1313-00
						(ATTACHING PARTS)		
	210-0406-00			2		NUT,PLAIN,HEX.:4-40 X 0.188 INCH,BRS	73743	2X12161-402
	210-0004-00			2		WASHER,LOCK:INTL,0.12 ID X 0.26"OD,STL	78189	1204-00-00-0541C
						- - - * - - -		
-119	260-1311-00			1		SWITCH,LEVER:1 SECT,4 POSN,22.5 DEG	80009	260-1311-00
						(ATTACHING PARTS)		
	210-0406-00			2		NUT,PLAIN,HEX.:4-40 X 0.188 INCH,BRS	73743	2X12161-402
	210-0004-00			2		WASHER,LOCK:INTL,0.12 ID X 0.26"OD,STL	78189	1204-00-00-0541C
						- - - * - - -		
-120	260-1312-00			1		SWITCH,LEVER:1 SECT,4 POSN,22.5 DEG	80009	260-1312-00
						(ATTACHING PARTS)		
	210-0406-00			2		NUT,PLAIN,HEX.:4-40 X 0.188 INCH,BRS	73743	2X12161-402
	210-0004-00			2		WASHER,LOCK:INTL,0.12 ID X 0.26"OD,STL	78189	1204-00-00-0541C
						- - - * - - -		
-121	----- -----			2		RES.,VAR:(SEE R270,R370 EPL)		
						(ATTACHING PARTS FOR EACH)		
-122	210-0583-00			1		NUT,PLAIN,HEX.:0.25-32 X 0.312 INCH,BRS	73743	2X20224-402
						- - - * - - -		
	376-0051-00	B010100	B121859	2		CPLG,SHAFT,FLEX:FOR 0.125 INCH DIA SHAFTS	80009	376-0051-00
-123	376-0051-01	B121860		2		CPLG,SHAFT,FLEX:FOR 0.125 INCH DIA SHAFTS	80009	376-0051-01
	195-0048-00			1		LEAD,ELECTRICAL:0.018 DIA X 0.75" MIN L	80009	195-0048-00
-124	384-0282-00			2		EXTENSION SHAFT:0.125 OD X 0.625 INCH LONG	80009	384-0282-00
	672-0036-00[1]			2		ASSEMBLY,ATTEN:CH1 VOLTS/DIV,CH2 VOLTS DIV	80009	672-0036-00
	672-0055-00[2]			2		ASSEMBLY,ATTEN:CH1 VOLTS/DIV,CH2 VOLTS/DIV	80009	672-0055-00
-125	337-1477-00	B010100	B019999	1		. SHLD,ELECTRICAL:ATTEN TOP	80009	337-1477-00
						(ATTACHING PARTS)		
-126	211-0116-00	B010100	B019999	5		. SCR,ASSEM WSHR:4-40 X 0.312 INCH,PNH BRS	83385	OBD
						- - - * - - -		
-127	337-1478-00	B010100	B019999	1		. SHLD,ELECTRICAL:ATTEN BOTTOM	80009	337-1478-00
						(ATTACHING PARTS)		
-128	211-0116-00	B010100	B019999	4		. SCR,ASSEM WSHR:4-40 X 0.312 INCH,PNH BRS	83385	OBD
						- - - * - - -		
-129	----- -----[3]			1		. CKT BOARD ASSY:50 OHM ATTEN(SEE A5,A6 EPL)		
-130	129-0317-00			5		. . POST,ELEC-MECH:4-40 X 0.187 X 0.125 INCH L	80009	129-0317-00
-131	131-0589-00			1		. . CONTACT,ELEC:0.46 INCH LONG	22526	47350
-132	131-1003-00			3		. . CONNECTOR BODY,:CKT CD MT,3 PRONG	80009	131-1003-00
-133	136-0252-04[1]			3		. . SOCKET,PIN TERM:0.188 INCH LONG	22526	75060
-134	260-1314-00[1]			1		. . SWITCH,PUSH:1 BUTTON,50 OHM/1M OHM	80009	260-1314-00
	260-1492-00[2]			1		. . SWITCH,PUSH:1 BUTTON,4 POLE	80009	260-1492-00
-135	131-1031-00			10		. . CONTACT ASSY,EL:CAM SWITCH,TOP	80009	131-1031-00
-136	131-1030-00			10		. . CONT ASSY,ELEC:CAM SW,BOTTOM	80009	131-1030-00
						(ATTACHING PARTS)		
	210-0779-00			10		. . RIVET,TUBULAR:0.051 OD X 0.115 INCH LONG	42838	RA-29952715
						- - - * - - -		
-137	131-1134-00			8		. . CONTACT,ELEC:CKT CARD TO SHIELD	80009	131-1134-00
-138	337-1479-00			1		. . SHIELD,GUIDE:PUSH BUTTON SWITCH	80009	337-1479-00
	198-2770-00			1		. . WIRE SET,ELEC:	80009	198-2770-00
	352-0161-00			2		. . . CONN BODY,PL,EL:3 WIRE BLACK	80009	352-0161-00
						(ATTACHING PARTS FOR C.B)		
-139	213-0277-00			6		. SCR,TPG,THD FOR:2-56 X 0.312 INCH,PNH STL	83385	OBD
-140	210-0053-00			6		. WASHER,LOCK:INTL,0.092 ID X 0.175"OD,STL	83385	OBD
-141	210-1008-00			6		. WASHER,FLAT:0.09 ID X 0.188" OD,BRS	12360	OBD
						- - - * - - -		
-142	366-1214-04			1		. PUSH BUTTON:--MARK	80009	366-1214-04
-143	380-0200-00			1		. HSG,PUSH BUTTON:1.02 X 0.34 X0.34 OA	80009	380-0200-00
-144	384-1099-00			1		. EXTENSION SHAFT:PUSH BUTTON,1.54 INCH LONG	80009	384-1099-00
-145	384-1078-00			1		. EXTENSION SHAFT:0.124 OD X 6.843 INCH LONG	80009	384-1078-00
-146	131-0679-00	B010100	B131949	1		. CONNECTOR,RCPT,:BNC W/HARDWARE	24931	28JR168-1
	131-0679-01	B131950		1		. CONNECTOR,RCPT,:BNC W/HARDWARE	24931	28JR168-1
						(ATTACHING PARTS)		
-147	361-0424-00	B010100	B131949X	1		. SPACER,RING:0.515 ID X 0.625 OD X 0.85"TH	80009	361-0424-00
						- - - * - - -		

[1] 485 and 485-1 only.
[2] 485-2 only.
[3] A6 replaces A5 in 485-2 only.

http://manoman.sqhill.com

Fig. & Index No.	Tektronix Part No.	Serial/Model No. Eff	Dscont	Qty	1 2 3 4 5	Name & Description	Mfr Code	Mfr Part Number
1-	210-1039-00	B131950		1		. WASHER,LOCK:INT,0.521 ID X 0.625 INCH OD	24931	OBD
	220-0497-00	B131950		1		. NUT,PLAIN,HEX.:0.5-28 X 0.562 INCH HEX,BRS	73743	OBD
-148	131-1135-00			1		. CONTACT,ELEC:BNC TO CRT BOARD	80009	131-1135-00
-149	441-1017-00			1		. CHASSIS,OSCP:ATTEN SWITCH	80009	441-1017-00
-150	220-0455-00			1		. NUT,BLOCK:0.281"SQ,THREE 4-40 THRU THDS	80009	220-0455-00
						(ATTACHING PARTS)		
-151	211-0007-00			1		. SCREW,MACHINE:4-40 X 0.188 INCH,PNH STL	83385	OBD
-152	211-0116-00			1		. SCR,ASSEM WSHR:4-40 X 0.312 INCH,PNH BRS	83385	OBD
						- - - * - - -		
-153	----- -----[1]			1		. CKT BOARD ASSY:LIGHT BLOCK(SEE A1,A2 EPL)		
-154	352-0300-00			1		. . LAMPHOLDER:VOLTS/DIV DIAL		
	198-2771-00			1		. . WIRE SET,ELEC:LIGHT BLOCK BOARD	80009	198-2771-00
-155	131-0621-00			2		. . . CONTACT,ELEC:0.577"L,22-26 AWG WIRE	22526	75694-006
-156	131-0707-00			12		. . . CONNECTOR,TERM.:0.48" L,22-26AWG WIRE	22526	75691-005
-157	352-0164-00			2		. . . CONN BODY,PL,EL:6 WIRE BLACK	80009	352-0164-00
-158	175-0829-00			FT		. . . WIRE,ELECTRICAL:6 WIRE RIBBON	08261	SS-0626-710610C
						(ATTACHING PARTS FOR CKT BD)		
-159	210-0405-00			2		. NUT,PLAIN,HEX.:2-56 X 0.188 INCH,BRS	73743	2X12157-402
						- - - * - - -		
-160	----- -----[2]			1		. CKT BOARD ASSY:HI Z ATTEN(SEE A3, A4 EPL)		
-161	129-0259-00			2		. . POST,ELEC-MECH:4-40 X 0.187 OD X 0.39" LG	80009	129-0259-00
-162	131-0608-00			22		. . TERMINAL,PIN:0.365 L X 0.25 PH,BRZ GOLD PL	22526	47357
-163	131-1003-00			2		. . CONNECTOR BODY,:CKT CD MT,3 PRONG	80009	131-1003-00
-164	136-0252-01			12		. . CONTACT,ELEC:0.178 INCH LONG	00779	1-332095-2
	136-0252-04			53		. . SOCKET,PIN TERM:0.188 INCH LONG	22526	75060
-165	131-1031-00			8		. . CONTACT ASSY,EL:CAM SWITCH,TOP	80009	131-1031-00
-166	131-1030-00			8		. . CONT ASSY,ELEC:CAM SW,BOTTOM	80009	131-1030-00
						(ATTACHING PARTS)		
	210-0779-00			8		. . RIVET,TUBULAR:0.051 OD X 0.115 INCH LONG	42838	RA-29952715
						- - - * - - -		
-167	131-1134-00			9		. . CONTACT,ELEC:CKT CARD TO SHIELD	80009	131-1134-00
-168	407-0803-00			1		. . BRACKET,CMPNT:	80009	407-0803-00
	351-0180-00	B020000		1		. . SLIDE,GUIDE:SWITCH ACTUATOR	80009	351-0180-00
	337-1477-00	B020000		1		. . SHLD,ELECTRICAL:ATTEN TOP	80009	337-1477-00
						(ATTACHING PARTS)		
	211-0007-00	B020000		8		. . SCREW,MACHINE:4-40 X 0.188 INCH,PNH STL	83385	OBD
						- - - * - - -		
	337-1478-00	B020000		1		. . SHLD,ELECTRICAL:ATTEN BOTTOM	80009	337-1478-00
						(ATTACHING PARTS)		
	211-0007-00	B020000		4		. . SCREW,MACHINE:4-40 X 0.188 INCH,PNH STL	83385	OBD
						- - - * - - -		
-169	129-0299-00			2		. POST,ELEC-MECH:HEX,0.333 INCH LONG	80009	129-0299-00
						(ATTACHING PARTS FOR EACH)		
-170	210-1002-00			1		. WASHER,FLAT:0.125 ID X 0.25 INCH OD,BRS	12327	OBD
-171	210-0053-00			1		. WASHER,LOCK:INTL,0.092 ID X 0.175"OD,STL	83385	OBD
						- - - * - - -		
-172	119-0325-00			1		. DELAY LINE,ELEC:ATTEN		
						(ATTACHING PARTS)		
-173	213-0113-00			1		. SCR,TPG,THD FOR:2-32 X 0.312 INCH,PNH STL	83385	OBD
-174	210-1008-00			1		. WASHER,FLAT:0.09 ID X 0.188" OD,BRS	12360	OBD
-175	210-0054-00			1		. WASHER,LOCK:SPLIT,0.118 ID X 0.212"OD STL	83385	OBD
						- - - * - - -		
-176	210-0774-00			4		. EYELET,METALLIC:0.152 OD X 0.245 INCH L,BRS	80009	210-0774-00
-177	210-0775-00			4		. EYELET,METALLIC:0.126 OD X 0.23 INCH L,BRS	80009	210-0775-00
-178	361-0425-01			2		. SPACER,BAR:CKT BOARD STIFFENER	80009	361-0425-01
						(ATTACHING PARTS)		
-179	213-0277-00			2		. SCR,TPG,THD FOR:2-56 X 0.312 INCH,PNH STL	83385	OBD
-180	210-0053-00			2		. WASHER,LOCK:INTL,0.092 ID X 0.175"OD,STL	83385	OBD
-181	210-1008-00			2		. WASHER,FLAT:0.09 ID X 0.188" OD,BRS	12360	OBD
						- - - * - - -		
-182	214-1575-00			1		. ACTUATOR,SL SW:DUAL SPDT,CKT BD MTG	80009	214-1575-00
-183	351-0180-00	B010100	B019999	1		. SLIDE,GUIDE:SWITCH ACTUATOR	80009	351-0180-00
-184	214-1190-00			1		. EXTENDER,RETRAC:	80009	214-1190-00

[1]A2 replaces A1 in 485-2 only.
[2]A4 replaces A3 in 485-2 only.

http://manoman.sqhill.com

Fig. & Index No.	Tektronix Part No.	Serial/Model No. Eff	Dscont	Qty	1 2 3 4 5	Name & Description	Mfr Code	Mfr Part Number
1-	213-0075-00			1		. . SETSCREW:4-40 X 0.094 INCH,HEX SOC STL	000BK	OBD
	213-0140-00			1		. . SETSCREW:2-56 X 0.94 INCH,HEX SOC STL	70276	OBD
-185	----- -----[1]			1		. RES.,VAR:(SEE R90 EPL)		
						(ATTACHING PARTS)		
-186	210-0583-00			1		. NUT,PLAIN,HEX.:0.25-32 X 0.312 INCH,BRS	73743	2X20224-402
-187	210-0046-00			1		. WASHER,LOCK:INTL,0.26 ID X 0.40" OD,STL	78189	1214-05-00-0541C
						- - - * - - -		
	131-1314-00[2]			1		. CONTACT,ELEC:GROUNDING	80009	131-1314-00
-188	105-0243-00			1		. ACTUATOR,SWITCH:	80009	105-0243-00
	105-0243-01			1		. ACTUATOR,SWITCH:LEVER	80009	105-0243-01
-189	213-0214-00			1		. SCREW,CAP SCH:2-56 X 0.375"HEX HD STL	70278	OBD
	263-1156-00	XB144460		1		. SW CAM ACTR AS:ATTENUATOR	80009	263-1156-00
						(ATTACHING PARTS)		
-190	211-0116-00			12		. SCR,ASSEM WSHR:4-40 X 0.312 INCH,PNH BRS	83385	OBD
-191	131-0963-00			2		. CONTACT,ELEC:GROUNDING	80009	131-0963-00
						- - - * - - -		
	----- -----			-		. . . SWITCH ASSY INCLUDES:		
-192	214-1139-00			1		. . SPRING,FLAT:GOLD COLORED	80009	214-1139-00
	214-1139-02			1		. . SPRING,FLAT:GREEN COLORED	80009	214-1139-02
	214-1139-03			3		. . SPRING,FLAT:RED COLORED	80009	214-1139-03
-193	214-1127-00			4		. . ROLLER,DETENT:0.125 DIA X 0.125 INCH L	80009	214-1127-00
-194	210-0406-00			6		. . NUT,PLAIN,HEX.:4-40 X 0.188 INCH,BRS	73743	2X12161-402
-195	401-0081-02			2		. . BEARING,CAM SW:FRONT	80009	401-0081-02
						(ATTACHING PARTS FOR EACH)		
-196	354-0391-00			1		. . RING,RETAINING:0.395"FREE ID X 0.025" STL	97464	3100-43-CD
						- - - * - - -		
-197	105-0282-00			1		. . DRUM,CAM SWITCH:	80009	105-0282-00
	210-0406-00			4		. . NUT,PLAIN,HEX.:4-40 X 0.188 INCH,BRS	73743	2X12161-402
-198	401-0115-00			1		. . BEARING,CAM SW:CENTER	80009	401-0115-00
-199	105-0283-00			1		. . DRUM,CAM SWITCH:	80009	105-0283-00
	198-3047-00			1		WIRE SET ELEC:ATTENUATOR ASSEMBLY	80009	198-3047-00
	210-0774-00			3		. EYELET,METALLIC:0.152 OD X 0.245 INCH L,BRS	80009	210-0774-00
	210-0775-00			3		. EYELET,METALLIC:0.126 OD X 0.23 INCH L,BRS	80009	210-0775-00
						(ATTACHING PARTS FOR EACH)		
-200	210-0590-00			2		NUT,PLAIN,HEX.:0.375 X 0.438 INCH,STL	73743	2X28269-402
	211-0503-00			1		SCREW,MACHINE:6-32 X 0.188 INCH,PNH STL	83385	OBD
						- - - * - - -		
-201	337-1630-00			1		SHIELD,FUSE:PAINTED	80009	337-1630-00
						(ATTACHING PARTS)		
-202	211-0007-00			1		SCREW,MACHINE:4-40 X 0.188 INCH,PNH STL	83385	OBD
	211-0105-00			1		SCREW,MACHINE:4-40 X 0.188"100 DEG,FLH STL	83385	OBD
	210-0801-00			1		WASHER,FLAT:0.14 ID X 0.28I OD NP STL	12327	OBD
						- - - * - - -		
-203	119-0302-00			1		DELAY LINE,ELEC:	80009	119-0302-00
-204	----- -----			1		COIL:(SEE L1794 EPL)		
						(ATTACHING PARTS)		
-205	211-0147-00			1		SCREW,MACHINE:4-40 X 0.25 INCH,PNH STL	83385	OBD
-206	210-0994-00			1		WASHER,FLAT:0.125 ID X 0.25" OD,STL	86928	5714-147-20N
-207	211-0148-00			1		SCREW,MACHINE:4-40 X 0.312 INCH,PNH STL	83385	OBD
-208	210-0863-00			1		WSHR,LOOP CLAMP:FOR 0.50" WIDE CLAMP,STL	95987	C191
-209	343-0002-00			1		CLAMP,LOOP:0.188 INCH DIA	95987	3-16-6B
-210	343-0217-00			1		CLAMP,COIL:Y-AXIS	80009	343-0217-00
						- - - * - - -		
-211	407-1045-00			2		BRACKET,ANGLE:CRT SHIELD	80009	407-1045-00
						(ATTACHING PARTS FOR EACH)		
-212	211-0590-00			1		SCREW,MACHINE:6-32 X 0.25 INCH,PNH STL	83385	OBD
-213	210-0457-00			1		NUT,PLAIN,EXT W:6-32 X 0.312 INCH,STL	83385	OBD
						- - - * - - -		
-214	214-0291-00			1		CONTACT,SPRING:1.188 X 0.375 X 0.25 INCH	80009	214-0291-00
						(ATTACHING PARTS)		
-215	211-0590-00			1		SCREW,MACHINE:6-32 X 0.25 INCH,PNH STL	83385	OBD
-216	210-0457-00			1		NUT,PLAIN,EXT W:6-32 X 0.312 INCH,STL	83385	OBD
-217	210-0202-00			1		TERMINAL,LUG:SE #6	78189	2104-06-00-2520N
						- - - * - - -		

[1] 485 and 485-1 only
[2] 485-2 only

http://manoman.sqhill.com

Fig. & Index No.	Tektronix Part No.	Serial/Model No. Eff	Dscont	Qty	1 2 3 4 5	Name & Description	Mfr Code	Mfr Part Number
1-218	337-1496-00			1		SHLD,ELECTRICAL:CRT	80009	337-1496-00
-219	386-2246-00			1		SUPPORT,CRT:REAR	80009	386-2246-00
-220	386-2188-00			1		SUPPORT,CRT:FRONT	80009	386-2188-00
	136-0489-00			1		SOCKET ASSY:CRT	80009	136-0489-00
-221	136-0304-02			1		. SOCKET,PLUG-IN:CRT,14 PIN SOCKET,W/PINS	80009	136-0304-02
-222	200-0917-01			1		. COV,ELECTRON TU:2.052 OD X 0.291" THK,PLSTC	80009	200-0917-01
-223	367-0117-00			1		. PULL,SOCKET:	80009	367-0117-00
-224	343-0235-00			1		. CLAMP,SOCKET:	80009	343-0235-00
-225	210-0774-00			4		. EYELET,METALLIC:0.152 OD X 0.245 INCH L,BRS	80009	210-0774-00
-226	210-0775-00			4		. EYELET,METALLIC:0.126 OD X 0.23 INCH L,BRS	80009	210-0775-00
-227	131-0707-00			14		. CONNECTOR,TERM.:0.48" L,22-26AWG WIRE	22526	75691-005
-228	352-0197-00			2		. CONN BODY,PL,EL:1 WIRE BLACK	80009	352-0197-00
-229	352-0162-00			3		. CONN BODY,PL,EL:4 WIRE BLACK	80009	352-0162-00
-230	352-0165-00			1		. CONN BODY,PL,EL:7 WIRE BLACK	80009	352-0165-00
	198-2786-00			1		WIRE SET,ELEC:HORIZONTAL OUTPUT AMP BOARD	80009	198-2786-00
	131-1119-00[1]			4		. CONTACT,ELEC:FOR NO. 22-26 AWG WIRE	22526	75374-001
-231	348-0276-00			FT		SHLD GSKT,ELEC:0.026 OD NPRNW/WIRE NET CO	28817	01-0404-3719
-232	179-1737-00[2]			1		WIRING HARNESS,:DELAY LINE	80009	179-1737-00
-233	131-0621-00			2		. CONTACT,ELEC:0.577"L,22-26 AWG WIRE	22526	75694-006
	210-0774-00			4		. EYELET,METALLIC:0.152 OD X 0.245 INCH L,BRS	80009	210-0774-00
	210-0775-00			4		. EYELET,METALLIC:0.126 OD X 0.23 INCH L,BRS	80009	210-0775-00
	352-0197-00			2		. CONN BODY,PL,EL:1 WIRE BLACK	80009	352-0197-00
	179-1738-00			1		WIRING HARNESS,:POT CABLE	80009	179-1738-00
	131-0707-00			10		. CONNECTOR,TERM.:0.48" L,22-26AWG WIRE	22526	75691-005
	352-0197-00			1		. CONN BODY,PL,EL:1 WIRE BLACK	80009	352-0197-00
	179-1734-00			1		WIRING HARNESS,:MAIN	80009	179-1734-00
	131-0707-00			94		. CONNECTOR,TERM.:0.48" L,22-26AWG WIRE	22526	75691-005
	131-0621-00			1		. CONTACT,ELEC:0.577"L,22-26 AWG WIRE	22526	75694-006
	210-0774-00			4		. EYELET,METALLIC:0.152 OD X 0.245 INCH L,BRS	80009	210-0774-00
	210-0775-00			4		. EYELET,METALLIC:0.126 OD X 0.23 INCH L,BRS	80009	210-0775-00
-234	352-0169-00			1		. CONN BODY,PL,EL:2 WIRE BLACK	80009	352-0169-00
-235	352-0161-00			1		. CONN BODY,PL,EL:3 WIRE BLACK	80009	352-0161-00
	352-0162-00			1		. CONN BODY,PL,EL:4 WIRE BLACK	80009	352-0162-00
-236	352-0163-00			2		. CONN BODY,PL,EL:5 WIRE BLACK	80009	352-0163-00
-237	352-0164-00			4		. CONN BODY,PL,EL:6 WIRE BLACK	80009	352-0164-00
	352-0165-00			3		. CONN BODY,PL,EL:7 WIRE BLACK	80009	352-0165-00
-238	352-0168-00			3		. CONN BODY,PL,EL:10 WIRE BLACK	80009	352-0168-00
	352-0197-00			1		. CONN BODY,PL,EL:1 WIRE BLACK	80009	352-0197-00
-239	378-0664-00			1		FILTER,LT CRT:BLUE PLEXI	80009	378-0664-00
-240	354-0248-00			1		HOLDER,LT FIL:	80009	354-0248-00
-241	214-0996-00			1		SPRING,FLAT:GROUNDING,CRT MESH FILTER	80009	214-0996-00
	198-2074-00			1		WIRE SET,ELEC:FINAL ASSY KIT	80009	198-2074-00
-242	407-1022-00			1		BRACKET,ANGLE:INT TRIG SW	80009	407-1022-00

[1]These pins are for the CRT Deflection leads.
[2]485 only.

http://manoman.sqhill.com

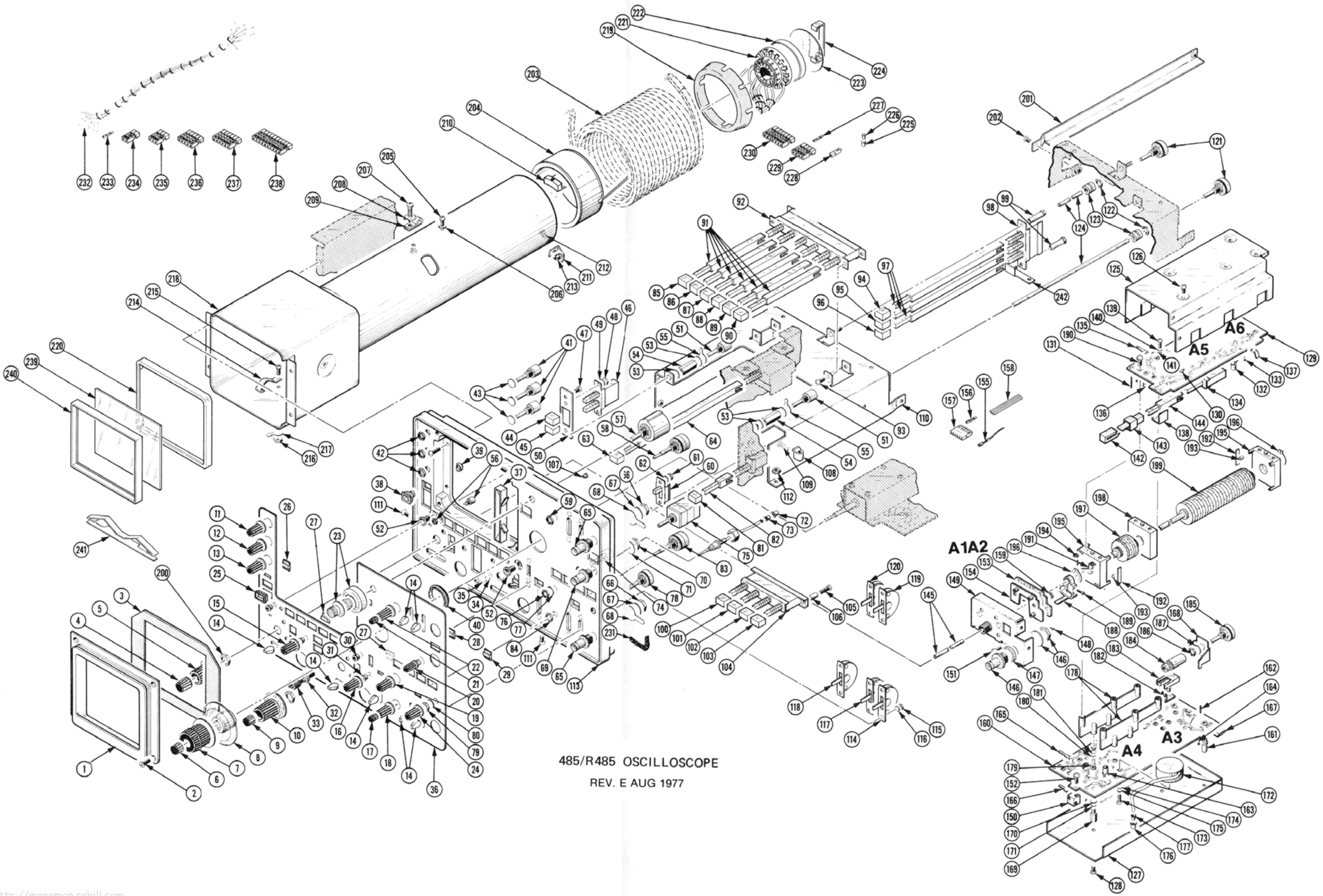

485/R485 OSCILLOSCOPE

REV. E AUG 1977

http://manoman.sqhill.com

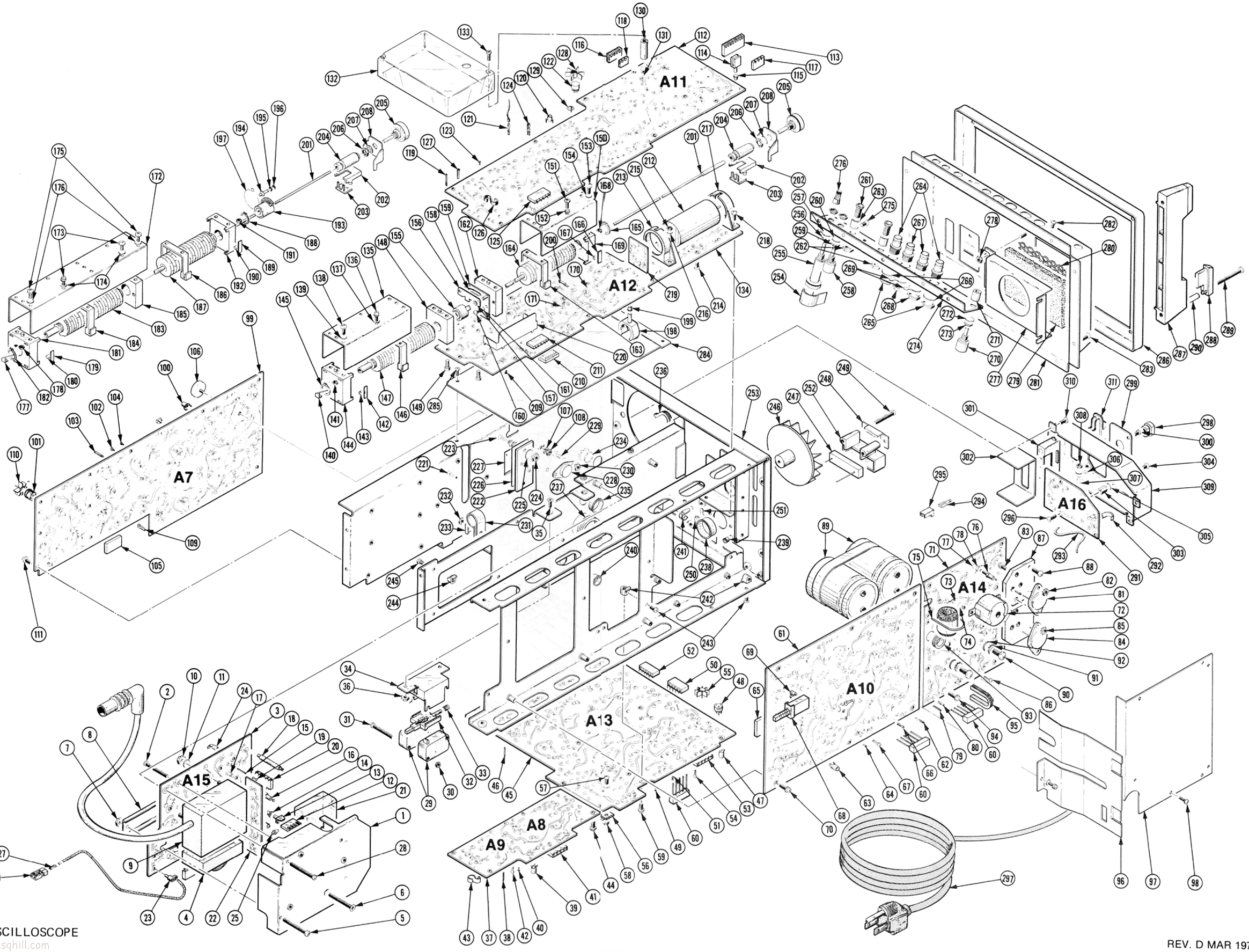

485/R485 OSCILLOSCOPE

http://manoman.sqhill.com

REV. D MAR 1977

Fig. & Index No.	Tektronix Part No.	Serial/Model No. Eff	Dscont	Qty	1 2 3 4 5 Name & Description	Mfr Code	Mfr Part Number
2-1	337-1495-00	B010100	B049999	1	SHIELD,ELEC:HIGH VOLTAGE	80009	337-1495-00
	337-1495-01	B050000		1	SHIELD,ELEC:HIGH VOLTAGE SUPPLY	80009	337-1495-01
					(ATTACHING PARTS)		
-2	211-0021-00			2	SCREW,MACHINE:4-40 X 1.25 INCH,PNH STL	83385	OBD
					- - - * - - -		
	348-0056-00	XB050000		1	GROMMET,PLASTIC:0.375 INCH DIA	80009	348-0056-00
-3	----- -----			1	CKT BOARD ASSY:TRANSFORMER(SEE A15 EPL)		
-4	120-0787-00			1	. TRANSFORMER:POWER	80009	120-0787-00
					(ATTACHING PARTS)		
-5	211-0553-00			1	. SCREW,MACHINE:6-32 X 1.5 INCH,PNH STL	83385	OBD
-6	211-0619-00			1	. SCREW,MACHINE:6-32 X 1.5 INCH,FLH STL	83385	OBD
-7	210-0457-00			2	. NUT,PLAIN,EXT W:6-32 X 0.312 INCH,STL	83385	OBD
-8	346-0095-00			1	. STRAP,RETAINING:XFMR	80009	346-0095-00
					- - - * - - -		
-9	152-0509-00			1	. SEMICOND DEVICE:V MULTR,3KV IN,18KV OUT	80009	152-0509-00
					(ATTACHING PARTS)		
-10	210-0458-00			3	. NUT,PLAIN,EXT W:8-32 X 0.344 INCH,STL	83385	OBD
-11	210-0804-00			3	. WASHER,FLAT:0.17 ID X 0.375 INCH OD,STL	12327	OBD
					- - - * - - -		
-12	124-0162-00			2	. TERMINAL BOARD:4 NOTCH,CERAMIC,STUD MTD	80009	124-0162-00
-13	355-0046-00			1	. . MOUNT,TERM. BD:0.577 INCH H	80009	355-0046-00
					(ATTACHING PARTS)		
-14	361-0007-00			1	. SPACER,SLEEVE:0.250 INCH DIA,PLASTIC	80009	361-0007-00
					- - - * - - -		
-15	131-0589-00			2	. CONTACT,ELEC:0.46 INCH LONG	22526	47350
-16	131-0809-00			1	. TERMINAL,STUD:PNL MT,4-40 TAP 1 END	71279	570-1510-01-0519
					(ATTACHING PARTS)		
-17	211-0005-00			1	. SCREW,MACHINE:4-40 X 0.125 INCH,PNH STL	83385	OBD
					- - - * - - -		
-18	129-0072-00			1	. INSULATOR,STDF:0.938 INCH LONG	80009	129-0072-00
	131-0309-00			1	. . TERMINAL,STUD:0.415 INCH LONG	88245	421572-02-9
	124-0119-00			1	. TERMINAL BOARD:2 NOTCH,CERAMIC,CLIP MTD	80009	124-0119-00
	355-0046-00			1	. . MOUNT,TERM. BD:0.577 INCH H	80009	355-0046-00
					(ATTACHING PARTS)		
	361-0007-00			1	. SPACER,SLEEVE:0.250 INCH DIA,PLASTIC	80009	361-0007-00
					- - - * - - -		
	124-0092-00			1	. TERMINAL BOARD:3 NOTCH,CERAMIC,CLIP MTD	80009	124-0092-00
	355-0046-00			1	. . MOUNT,TERM. BD:0.577 INCH H	80009	355-0046-00
					(ATTACHING PARTS)		
	361-0007-00			1	. SPACER,SLEEVE:0.250 INCH DIA,PLASTIC	80009	361-0007-00
					- - - * - - -		
-19	136-0328-02	B010100	B142955	2	. SOCKET,PIN TERM:HORIZONTAL	00779	86282-2
	136-0328-03	B142956		2	. SOCKET,PIN TERM:HORIZ,SQ PIN RCPT	22526	47710
-20	136-0461-00			8	. SKT,PL-IN ELEC:CKT CARD CONTACT	80009	136-0461-00
	343-0043-00			3	. CLAMP,LOOP:#20,NEON BULBS	80009	343-0043-00
-21	200-1485-00			1	. COVER,CKT BD:XFMR-MULT	80009	200-1485-00
					(ATTACHING PARTS)		
	213-0088-00			2	. SCR,TPG,THD CTG:4-24 X 0.25 INCH,PNH STL	83385	OBD
					- - - * - - -		
-22	388-2476-00			1	. CKT BOARD:HV	80009	388-2476-00
	343-0144-00	B010100	B049999	1	. CLAMP,LOOP:0.125 INCH ID,BLK NYLON	95987	1-8-2
-23	343-0444-00	B050000		1	. CLAMP,LOOP:0.125 INCH ID	95987	1-8-2
					(ATTACHING PARTS)		
	211-0008-00	B010100	B049999X	1	. SCREW,MACHINE:4-40 X 0.25 INCH,PNH STL	83385	OBD
	210-0801-00	B010100	B049999X	1	. WASHER,FLAT:0.14 ID X 0.28I OD NP STL	12327	OBD
	210-0586-00	B010100	B049999X	1	. NUT,PLAIN,EXT W:4-40 X 0.25 INCH,STL	78189	OBD
					- - - * - - -		
	343-0088-00	B010100	B010126	4	. CLAMP,LOOP:0.062 INCH DIA	80009	343-0088-00
-24	343-0088-00	B010127		3	. CLAMP,LOOP:0.062 INCH DIA	80009	343-0088-00
	343-0213-00	B010127		1	. CLAMP,LOOP:PRESS MT,PLASTIC	80009	343-0213-00
-25	386-1556-00			1	. SPACER,CKT CARD:0.215 BD HT,PLASTIC	80009	386-1556-00
	198-2784-00			1	. WIRE SET ELEC:TRANSFORMER MULTIPLIER BOARD	80009	198-2784-00
	352-0171-00			4	. . CONN BODY,PL,EL:1 WIRE BLACK	80009	352-0171-00

http://manoman.sqhill.com

Fig. & Index No.	Tektronix Part No.	Serial/Model No. Eff	Dscont	Qty	1 2 3 4 5	Name & Description	Mfr Code	Mfr Part Number
2-26	352-0198-00			1		. . CONN BODY,PL,EL:2 WIRE BLACK	80009	352-0198-00
-27	131-0707-00			4		. . CONNECTOR,TERM.:0.48" L,22-26AWG WIRE	22526	75691-005
						(ATTACHING PARTS FOR CKT BD)		
-28	211-0021-00			2		SCREW,MACHINE:4-40 X 1.25 INCH,PNH STL	83385	OBD
	211-0207-00			2		SCR,ASSEM WSHR:4-40 X 0.312 INCH,PNH STL	83385	OBD
						- - - * - - -		
	644-0437-00			1		POWER SWITCH ASSEMBLY		
-29	260-1368-01			2		. SWITCH,SENS:SPST,15A,250VAC	89265	A1-M1-3G1-6-33
						(ATTACHING PARTS)		
-30	220-0665-00			2		. NUT,PLAIN,HEX.:SLFLKG,4-40 X0.25",PLSTC	23050	OBD
-31	211-0020-00			2		. SCREW,MACHINE:4-40 X 1.125 INCH,PNH STL	83385	OBD
						- - - * - - -		
-32	214-1689-00			1		. ACTUATOR,SWITCH:	80009	214-1689-00
-33	214-1226-01			1		. SPRING,HLCPS:0.18 OD X 0.44 INCH LONG	80009	214-1226-01
-34	200-1318-00			1		. COVER,SW ACTR:	80009	200-1318-00
						(ATTACHING PARTS)		
-35	211-0101-00			2		SCREW,MACHINE:4-40 X 0.25" 100 DEG,FLH STL	83385	OBD
-36	210-0586-00			2		NUT,PLAIN,EXT W:4-40 X 0.25 INCH,STL	78189	OBD
						- - - * - - -		
-37	----- -----[1]			1		CKT BOARD ASSY:A TRIGGER(SEE A8 AND A9 EPL)		
-38	131-0589-00			1		. CONTACT,ELEC:0.46 INCH LONG	22526	47350
	131-0608-00			9		. TERMINAL,PIN:0.365 L X 0.25 PH,BRZ GOLD,PL	22526	47357
-39	131-1003-00			7		. CONNECTOR BODY,:CKT CD MT,3 PRONG	80009	131-1003-00
	136-0252-04	B010100	B091529	128		. SOCKET,PIN TERM:0.188 INCH LONG	22526	75060
-40	136-0252-04	B091530	B143774	125		. SOCKET,PIN TERM:0.188 INCH LONG	22526	75060
	136-0252-04	B143775		105		. SOCKET,PIN TERM:0.188 INCH LONG	22526	75060
	136-0514-00	B091530		1		. SOCKET,PLUG IN:MICROCIRCUIT,8 CONTACT	73803	C950802
	136-0634-00	B143775		1		. SOCKET,PLUG-IN:20 LEAD DIP,CKT BD MTG	73803	C952002
-41	136-0461-00			2		. SKT,PL-IN ELEC:CKT CARD CONTACT	80009	136-0461-00
-42	214-0579-00			3		. TERM.,TEST PT:0.40 INCH LONG	80009	214-0579-00
-43	200-1167-00			1		. COVER,XSTR:TEMP STAB FOR 2 TO-18 CS STYLE	80009	200-1167-00
						(ATTACHING PARTS FOR CKT BD)		
-44	211-0007-00			4		SCREW,MACHINE:4-40 X 0.188 INCH,PNH STL	83385	OBD
						- - - * - - -		
-45	----- -----			1		CKT BOARD ASSY:POWER SUPPLY(SEE A13 EPL)		
-46	131-0608-00			35		. TERMINAL,PIN:0.365 L X 0.25 PH,BRZ GOLD,PL	22526	47357
-47	131-1003-00			4		. CONNECTOR BODY,:CKT CD MT,3 PRONG	80009	131-1003-00
-48	136-0183-00			6		. SOCKET,PLUG-IN:3 PIN,ROUND	80009	136-0183-00
-49	136-0252-04	B010100	B091529	69		. SOCKET,PIN TERM:0.188 INCH LONG	22526	75060
	136-0252-04	B091530		58		. SOCKET,PIN TERM:0.188 INCH LONG	22526	75060
	136-0220-00	B091530		2		. SOCKET,PLUG-IN:3 PIN,SQUARE	71785	133-23-11-034
	136-0514-00	B091530		1		. SOCKET,PLUG IN:MICROCIRCUIT,8 CONTACT	73803	C950802
-50	136-0260-02			6		. SOCKET,PLUG-IN:16 CONTACT,LOW CLEARANCE	82647	C951601
-51	136-0263-04			35		. SOCKET,PIN TERM:FOR 0.025 INCH SQUARE PIN	22526	48059
	136-0263-03			1		. SOCKET,PIN TERM:FOR 0.025 INCH SQUARE PIN	00779	86250-2
-52	136-0269-02			3		. SOCKET,PLUG-IN:14 CONTACT,LOW CLEARANCE	01295	C951401
-53	136-0461-00			3		. SKT,PL-IN ELEC:CKT CARD CONTACT	80009	136-0461-00
-54	214-0579-00			24		. TERM.,TEST PT:0.40 INCH LONG	80009	214-0579-00
-55	214-1292-00			6		. HEAT SINK,ELEC:TRANSISTOR	05820	205-AB
-56	----- -----			2		. TRANSISTOR:(SEE Q2066,Q2076 EPL)		
						(ATTACHING PARTS FOR EACH)		
-57	211-0097-00			1		. SCREW,MACHINE:4-40 X 0.312 INCH,PNH STL	83385	OBD
-58	210-0406-00			1		. NUT,PLAIN,HEX.:4-40 X 0.188 INCH,BRS	73743	2X12161-402
						- - - * - -		
						(ATTACHING PARTS FOR CKT BD)		
-59	211-0007-00			7		SCREW,MACHINE:4-40 X 0.188 INCH,PNH STL	83385	OBD
						- - - * - -		
-60	131-1143-00			26		CONNECTOR,RCPT:CKT BD,5 PIN	80009	131-1143-00
-61	----- -----			1		CKT BOARD ASSY:SWEEP GENERATOR(SEE A10 EPL)		
	131-0566-00	XB020000		1		. LINK,TERM.CONNE:0.086 DIA X 2.375 INCH L	55210	L-2007-1
-62	131-0589-00			1		. CONTACT,ELEC:0.46 INCH LONG	22526	47350
	131-0608-00			10		. TERMINAL,PIN:0.365 L X 0.25 PH,BRZ GOLD PL	22526	47357
-63	131-1003-00			3		. CONNECTOR BODY,:CKT CD MT,3 PRONG	80009	131-1003-00

[1]A9 replaces A8 in 485-1 and 485-2 instruments.

http://manoman.sqhill.com

Fig. & Index No.	Tektronix Part No.	Serial/Model No. Eff	Dscont	Qty	1 2 3 4 5 Name & Description	Mfr Code	Mfr Part Number
2-	136-0252-04	B010100	B091529	196	. SOCKET,PIN TERM:0.188 INCH LONG	22526	75060
-64	136-0252-04	B091530		188	. SOCKET,PIN TERM:0.188 INCH LONG	22526	75060
	136-0220-00	B091530		8	. SOCKET,PLUG-IN:3 PIN,SQUARE	71785	133-23-11-034
-65	136-0260-02			1	. SOCKET,PLUG-IN:16 CONTACT,LOW CLEARANCE	82647	C951601
-66	136-0263-04			68	. SOCKET,PIN TERM:FOR 0.025 INCH SQUARE PIN	22526	48059
	214-0579-00	B010100	B019999	21	. TERM.,TEST PT:0.40 INCH LONG	80009	214-0579-00
-67	214-0579-00	B020000		20	. TERM.,TEST PT:0.40 INCH LONG	80009	214-0579-00
-68	260-1208-00			1	. SWITCH,PUSH:DPDT	80009	260-1208-00
-69	361-0382-00			2	. SPACER,PB SW:BROWN,0.275 INCH LONG	80009	361-0382-00
					(ATTACHING PARTS FOR CKT BD)		
-70	211-0007-00			6	SCREW,MACHINE:4-40 X 0.188 INCH,PNH STL	83385	OBD
					- - - * - -		
-71	----- -----			1	CKT BOARD ASSY:INVERTER(SEE A14 EPL)		
-72	----- -----			1	. COIL,RF:(SEE L1835 EPL)		
					(ATTACHING PARTS)		
-73	211-0008-00			2	. SCREW,MACHINE:4-40 X 0.25 INCH,PNH STL	83385	OBD
-74	210-0004-00			2	. WASHER,LOCK:INTL,0.12 ID X 0.26"OD,STL	78189	1204-00-00-0541C
					- - - * - -		
-75	346-0032-00			3	. STRAP,RETAINING:	98159	2829-75-4
-76	131-0373-00			1	. TERMINAL,STUD:	71279	4894-1-0516
					(ATTACHING PARTS)		
-77	210-0405-00			1	. NUT,PLAIN,HEX.:2-56 X 0.188 INCH,BRS	73743	2X12157-402
-78	210-0053-00			1	. WASHER,LOCK:INTL,0.092 ID X 0.175"OD,STL	83385	OBD
					- - - * - - -		
-79	131-0589-00			1	. CONTACT,ELEC:0.46 INCH LONG	22526	47350
	131-0590-00			2	. CONTACT,ELEC:0.71 INCH LONG	22526	47351
	136-0254-00			4	. SOCKET,PIN TERM:0.088 OD X 0.145 INCH LONG	00779	1-331892-5
-80	136-0263-04			5	. SOCKET,PIN TERM:FOR 0.025 INCH SQUARE PIN	22526	48059
-81	----- -----			1	. TRANSISTOR:(SEE Q1834 EPL)		
					(ATTACHING PARTS)		
-82	210-0586-00			1	. NUT,PLAIN,EXT W:4-40 X 0.25 INCH,STL	78189	OBD
-83	355-0518-02			1	. STUD,SELF-LKG:4-40 X 0.625 INCH LONG,BRS	80009	355-0518-02
					- - - * - - -		
	337-1498-00	B010100	B091550X	1	. SHIELD,TSTR:TO-3 TOP	80009	337-1498-00
					(ATTACHING PARTS)		
	210-0586-00	B010100	B091550X	1	. NUT,PLAIN,EXT W:4-40 X 0.25 INCH,STL	78189	OBD
	211-0005-00	B010100	B091550X	1	. SCREW,MACHINE:4-40 X 0.125 INCH,PNH STL	83385	OBD
	355-0518-02	B010100	B091550X	1	. STUD,SELF-LKG:4-40 X 0.625 INCH LONG,BRS	80009	355-0518-02
					- - - * - - -		
-84	----- -----			1	. TRANSISTOR:(SEE Q1844 EPL)		
					(ATTACHING PARTS		
-85	210-0586-00			2	. NUT,PLAIN,EXT W:4-40 X 0.25 INCH,STL	78189	OBD
	386-0978-00	B010100	B091550X	1	. INSULATOR,PLATE:0.002 INCH MICA,FOR TO-3	80009	386-0978-00
	355-0518-02			2	. STUD,SELF-LKG:4-40 X 0.625 INCH LONG,BRS	80009	355-0518-02
					- - - * - - -		
-86	214-0579-00			3	. TERM.,TEST PT:0.40 INCH LONG	80009	214-0579-00
-87	214-1581-00			2	. HEAT SINK,ELEC:	80009	214-1581-00
					(ATTACHING PARTS FOR EACH)		
-88	211-0578-00			2	. SCREW,MACHINE:6-32 X 0.438 lNCH,PNH STL	83385	OBD
					- - - * - - -		
	337-1499-00	B010100	B091550X	1	. SHIELD,TSTR:TO-3 BOTTOM	80009	337-1499-00
-89	----- -----			2	. CAPACITOR:(SEE C1822,C1823 EPL)		
					(ATTACHING PARTS FOR EACH)		
-90	212-0507-00			2	. SCREW,MACHINE:10-32 X 0.375 INCH,PNH STL	83385	OBD
-91	210-0009-00			2	. WASHER,LOCK:EXT,0.193ID X0.40" OD,STL	78189	1110-00
-92	210-0805-00			2	. WASHER,FLAT:0.204 ID X 0.438 INCH OD,STL	12327	OBD
					- - - * - - -		
-93	348-0005-00			1	. GROMMET,RUBBER:0.50 INCH DIA	70485	230
	198-2783-00			1	. WIRE SET,ELEC:INVERTER BOARD	80009	198-2783-00
					(ATTACHING PARTS FOR CKT BD)		
-94	211-0207-00			3	SCR,ASSEM WSHR:4-40 X 0.312 INCH,PNH STL	83385	OBD
					- - - * - - -		
-95	348-0145-00	XB050000		1	GROMMET,PLASTIC:U-SHP,1.0 X 0.42 INCH	80009	348-0145-00

http://manoman.sqhill.com

Fig. & Index No.	Tektronix Part No.	Serial/Model No. Eff	Dscont	Qty	1 2 3 4 5	Name & Description	Mfr Code	Mfr Part Number
2-	337-1665-00	B010100	B049999	1		SHIELD,ELEC:INVERTER	80009	337-1665-00
-96	337-1850-00	B505000		1		SHIELD,ELEC:INVERTER,SIDE	80009	337-1850-00
-97	337-1665-01	B050000		1		SHIELD,ELEC:INVERTER,TOP	80009	337-1665-01
						(ATTACHING PARTS)		
-98	211-0007-00			4		SCREW,MACHINE:4-40 X 0.188 INCH,PNH STL	83385	OBD
						- - - * - - -		
-99	----- -----			1		CKT BOARD ASSY:VERTICAL(SEE A7 EPL)		
	131-0589-00			1		. CONTACT,ELEC:0.46 INCH LONG	22526	47350
	131-0608-00			28		. TERMINAL,PIN:0.365 L X 0.25 PH,BRZ GOLD,PL	22526	47357
-100	131-1003-00			11		. CONNECTOR BODY,:CKT CD MT,3 PRONG	80009	131-1003-00
-101	136-0183-00			1		. SOCKET,PLUG-IN:3 PIN,ROUND	80009	136-0183-00
	136-0252-04	B010100	B091529	256		. SOCKET,PIN TERM:0.188 INCH LONG	22526	75060
-102	136-0252-04	B091530		212		. SOCKET,PIN TERM:0.188 INCH LONG	22526	75060
	136-0220-00	B091530		14		. SOCKET,PLUG-IN:3 PIN,SQUARE	71785	133-23-11-034
	136-0514-00	B091530		1		. SOCKET,PLUG IN:MICROCIRCUIT,8 CONTACT	73803	C950802
	136-0263-03	B010100	B142799	1		. SOCKET,PIN TERM:FOR 0.025 INCH SQUARE PIN	00779	86250-2
-103	136-0263-04	B142780		1		. SOCKET,PIN TERM:FOR 0.025 INCH SQUARE PIN	22526	48059
-104	136-0352-00			8		. CONTACT,ELEC:FOR 0.02 INCH DIAMETER PIN	00779	50462-7
-105	136-0461-00			3		. SKT,PL-IN ELEC:CKT CARD CONTACT	80009	136-0461-00
-106	----- -----			1		. INTEGRATED CKT:(SEE U332 EPL)		
						(ATTACHING PARTS)		
-107	210-0551-00			1		. NUT,PLAIN,HEX.:4-40 X 0.25 INCH,STL	83385	OBD
-108	210-1115-00			1		. WASHER,NONMETAL:0.27 ID X 0.37" OD,TEFLON	86445	OBD
						- - - * - - -		
-109	214-0579-00			12		. TERM.,TEST PT:0.40 INCH LONG	80009	214-0579-00
-110	214-1292-00			1		. HEAT SINK,ELEC:TRANSISTOR	05820	205-AB
	198-2785-00			1		. WIRE SET,ELEC:VERTICAL BOARD	80009	198-2785-00
						(ATTACHING PARTS FOR CKT BD)		
-111	211-0207-00			14		SCR,ASSEM WSHR:4-40 X 0.312 INCH,PNH STL	83385	OBD
						- - - * - - -		
-112	----- -----			1		CKT BOARD ASSY:HORIZONTAL AMP(SEE A11 EPL)		
-113	124-0158-00			1		. TERMINAL BOARD:7 NOTCH,MINI	80009	124-0158-00
-114	355-0046-00			2		. . MOUNT,TERM. BD:0.577 INCH H	80009	355-0046-00
						(ATTACHING PARTS)		
-115	361-0007-00			2		. SPACER,SLEEVE:0.250 INCH DIA,PLASTIC	80009	361-0007-00
						- - - * - - -		
-116	124-0120-00			1		. TERMINAL STRIP:4 NOTCH	80009	124-0120-00
	355-0046-00			2		. . MOUNT,TERM. BD:0.577 INCH H	80009	355-0046-00
						(ATTACHING PARTS)		
	361-0007-00			2		. SPACER,SLEEVE:0.250 INCH DIA,PLASTIC	80009	361-0007-00
						- - - * - - -		
-117	124-0092-00			1		. TERMINAL BOARD:3 NOTCH,CERAMIC,CLIP MTD	80009	124-0092-00
	355-0046-00			1		. . MOUNT,TERM. BD:0.577 INCH H	80009	355-0046-00
						(ATTACHING PARTS)		
	361-0007-00			1		. SPACER,SLEEVE:0.250 INCH DIA,PLASTIC	80009	361-0007-00
						- - - * - - -		
-118	124-0119-00			1		. TERMINAL BOARD:2 NOTCH,CERAMIC,CLIP MTD	80009	124-0119-00
	355-0046-00			1		. . MOUNT,TERM. BD:0.577 INCH H	80009	355-0046-00
						(ATTACHING PARTS)		
	361-0007-00			1		. SPACER,SLEEVE:0.250 INCH DIA,PLASTIC	80009	361-0007-00
						- - - * - - -		
-119	131-0589-00			4		. CONTACT,ELEC:0.46 INCH LONG	22526	47350
	131-0608-00			19		. TERMINAL,PIN:0.365 L X 0.25 PH,BRZ GOLD,PL	22526	47357
	131-0787-00			2		. CONTACT,ELEC:0.64 INCH LONG	22526	47359
-120	131-1003-00			4		. CONNECTOR BODY,:CKT CD MT,3 PRONG	80009	131-1003-00
-121	131-1119-00			2		. CONTACT,ELEC:FOR NO. 22-26 AWG WIRE	22526	75374-001
-122	136-0183-00			4		. SOCKET,PLUG-IN:3 PIN,ROUND	80009	136-0183-00
	136-0252-04	B010100	B091529	139		. SOCKET,PIN TERM:0.188 INCH LONG	22526	75060
	136-0252-04	B091530	B142055	113		. SOCKET,PIN TERM:0.188 INCH LONG	22526	75060
-123	136-0252-04	B142056		116		. SOCKET,PIN TERM:0.188 INCH LONG	22526	75060
	136-0220-00	B091530	B142055	6		. SOCKET,PLUG-IN:3 PIN,SQUARE	71785	133-23-11-034
	136-0220-00	B142056		5		. SOCKET,PLUG-IN:3 PIN,SQUARE	71785	133-23-11-034
	136-0514-00	B091530		1		. SOCKET,PLUG IN:MICROCIRCUIT,8 CONTACT	73803	C950802

http://manoman.sqhill.com

RACKMOUNT CABINET

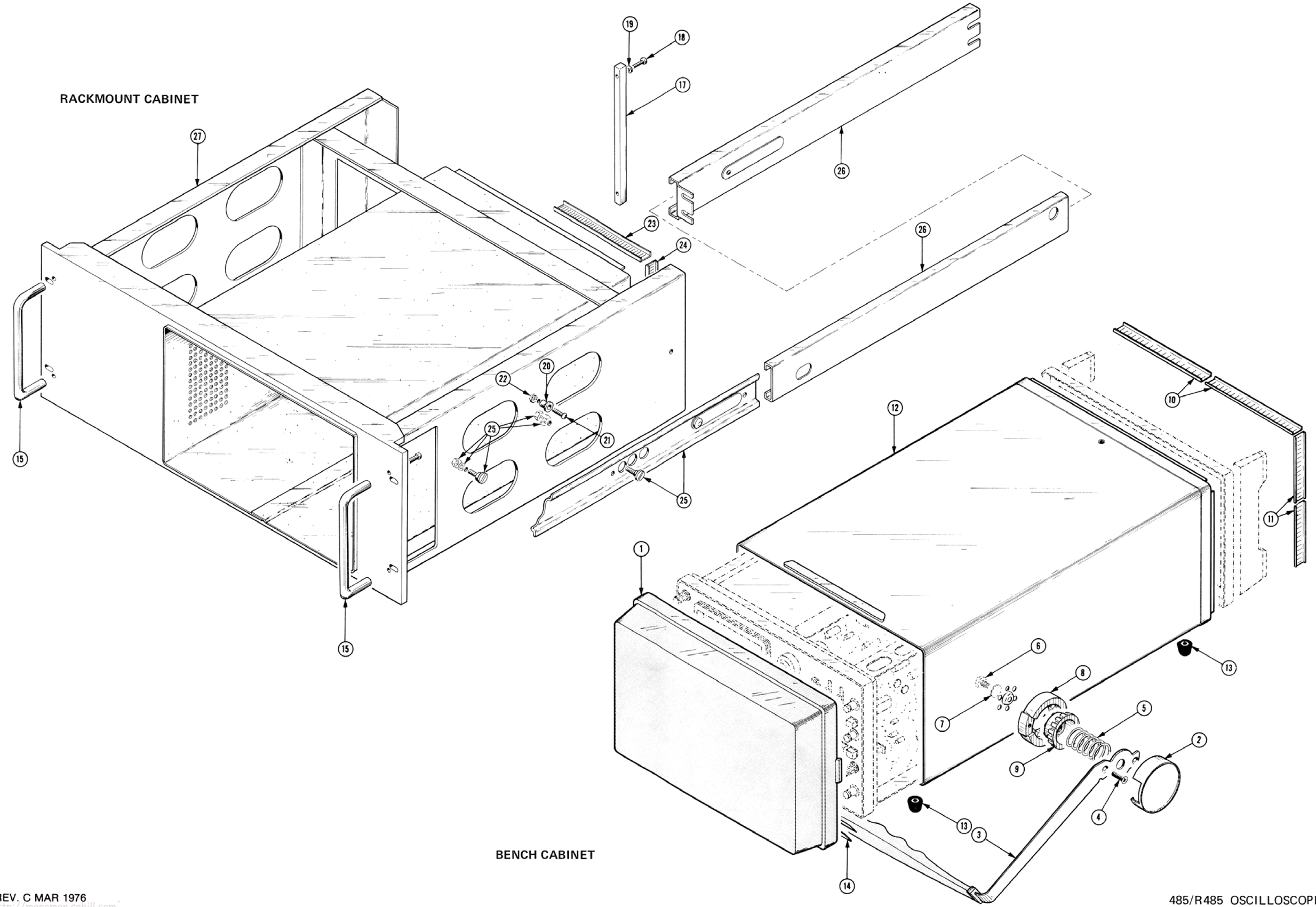

BENCH CABINET

http://manoman.sqhill.com

Fig. & Index No.	Tektronix Part No.	Serial/Model No. Eff	Dscont	Qty	1 2 3 4 5 Name & Description	Mfr Code	Mfr Part Number
2-124	136-0327-01	B010100	B142799	12	. SOCKET,PIN TERM:0.067 INCH DIA	00779	86281-2
	136-0263-04	B142800		12	. SOCKET,PIN TERM:FOR 0.025 INCH SQUARE PIN	22526	48059
-125	136-0461-00			4	. SKT,PL-IN ELEC:CKT CARD CONTACT	80009	136-0461-00
-126	200-1167-00			1	. COVER,XSTR:TEMP STAB FOR 2 TO-18 CS STYLE	80009	200-1167-00
-127	214-0579-00			23	. TERM.,TEST PT:0.40 INCH LONG	80009	214-0579-00
-128	214-1292-00			4	. HEAT SINK,ELEC:TRANSISTOR	05820	205-AB
-129	343-0043-00			2	. CLAMP,LOOP:#20,NEON BULBS	80009	343-0043-00
-130	384-0531-00			2	. ROD,SPACER:0.25 OD X 0.656 INCH LONG	80009	384-0531-00
					(ATTACHING PARTS FOR EACH)		
-131	211-0097-00			1	. SCREW,MACHINE:4-40 X 0.312 INCH,PNH STL	83385	OBD
	210-0004-00			1	. WASHER,LOCK:INTL,0.12 ID X 0.26"OD,STL	78189	1204-00-00-0541C
					- - - * - - -		
					(ATTACHING PARTS FOR CKT BD)		
	211-0007-00			8	SCREW,MACHINE:4-40 X 0.188 INCH,PNH STL	83385	OBD
					- - - * - - -		
-132	337-1500-00			1	SHIELD,CKT BD:Z AXIS ON B TIRG HORIZ	80009	337-1500-00
					(ATTACHING PARTS)		
-133	211-0007-00			2	SCREW,MACHINE:4-40 X 0.188 INCH,PNH STL	83385	OBD
-134	----- -----			1	CKT BOARD ASSY:SWEEP TIMING(SEE A12 EPL)		
	105-0281-00	B010100	B049999	1	. ACTUATOR ASSY:CAM SW TIME/CM,A SWP	80009	105-0281-00
-135	200-1275-00	B010100	B049999	1	. . COVER,CAM SW:	80009	200-1275-00
					(ATTACHING PARTS)		
-136	211-0022-00	B010100	B049999	2	. . SCREW,MACHINE:2-56 X 0.188 INCH,PNH STL	83385	OBD
-137	210-0001-00	B010100	B049999	2	. . WASHER,LOCK:INTL,0.092 ID X 0.18"OD,STL	78189	1202-00-00-0541C
-138	211-0008-00	B010100	B049999	4	. . SCREW,MACHINE:4-40 X 0.25 INCH,PNH STL	83385	OBD
-139	210-0004-00	B010100	B049999	4	. . WASHER,LOCK:INTL,0.12 ID X 0.26"OD,STL	78189	1204-00-00-0541C
					- - - * - - -		
-140	131-0963-00	B010100	B049999	1	. . CONTACT,ELEC:GROUNDING	80009	131-0963-00
-141	210-0406-00	B010100	B049999	3	. . NUT,PLAIN,HEX.:4-40 X 0.188 INCH,BRS	73743	2X12161-402
-142	214-1139-02	B010100	B049999	1	. . SPRING,FLAT:GREEN COLORED	80009	214-1139-02
	214-1139-03	B010100	B049999	1	. . SPRING,FLAT:RED COLORED	80009	214-1139-03
-143	214-1127-00	B010100	B049999	2	. . ROLLER,DETENT:0.125 DIA X 0.125 INCH L	80009	214-1127-00
-144	401-0081-02	B010100	B049999	1	. . BEARING,CAM SW:FRONT	80009	401-0081-02
					(ATTACHING PARTS)		
-145	354-0391-00	B010100	B049999	1	. . RING,RETAINING:0.395"FREE ID X 0.025" STL	97464	3100-43-CD
					- - - * - - -		
-146	407-0926-00	B010100	B049999	1	. . BRACKET,COVER:	80009	407-0926-00
-147	105-0277-00	B010100	B049999	1	. . ACTUATOR,CAM SW:TIME/CM A	80009	105-0277-00
	210-0406-00	B010100	B049999	4	. . NUT,PLAIN,HEX.:4-40 X 0.188 INCH,BRS	73743	2X12161-402
-148	401-0146-01	B010100	B049999	1	. . BEARING,CAM SW:CENTER	80009	401-0146-01
					(ATTACHING PARTS FOR ASSY)		
-149	211-0116-00	B010100	B049999	4	. SCR,ASSEM WSHR:4-40 X 0.312 INCH,PNH BRS	83385	OBD
	211-0180-00	B010100	B049999	2	. SCR,ASSEM WSHR:2-56 X 0.25 INCH,PNH BRS	83385	OBD
					- - - * - - -		
	105-0335-00	B010100	B049999	1	. ACTUATOR ASSY:CAM SW TIME/CM,B SWP	80009	105-0335-00
-150	200-1355-00	B010100	B049999	1	. . COVER,CAM SW:	80009	200-1355-00
					(ATTACHING PARTS)		
-151	211-0022-00	B010100	B049999	2	. . SCREW,MACHINE:2-56 X 0.188 INCH,PNH STL	83385	OBD
-152	210-0001-00	B010100	B049999	2	. . WASHER,LOCK:INTL,0.092 ID X 0.18"OD,STL	78189	1202-00-00-0541C
-153	211-0008-00	B010100	B049999	4	. . SCREW,MACHINE:4-40 X 0.25 INCH,PNH STL	83385	OBD
-154	210-0004-00	B010100	B049999	4	. . WASHER,LOCK:INTL,0.12 ID X 0.26"OD,STL	78189	1204-00-00-0541C
					- - - * - - -		
-155	105-0280-01	B010100	B049999	1	. . STOP,ROT,KNOB:W/BUSHING	80009	105-0280-01
	213-0153-00	B010100	B049999	2	. . . SETSCREW:5-40 X 0.125 INCH,HEX SOC STL	74445	OBD
-156	105-0279-00	B010100	B049999	1	. . STOP,KNOB PULL:STATIONARY	80009	105-0279-00
					(ATTACHING PARTS)		
-157	354-0350-00	B010100	B049999	2	. . RING,RETAINING:0.073"FREE ID X 0.015",STL	79136	5133-9MD
					- - - * - - -		
-158	214-1705-00	B010100	B049999	1	. . SPRING,FLAT:STOP PLATE,CAM SWITCH	80009	214-1705-00
-159	386-2211-00	B010100	B049999	1	. . SPRT,STOP PLATE:CAM SWITCH	80009	386-2211-00
					(ATTACHING PARTS)		
-160	211-0022-00	B010100	B049999	2	. . SCREW,MACHINE:2-56 X 0.188 INCH,PNH STL	83385	OBD
-161	210-0001-00	B010100	B049999	2	. . WASHER,LOCK:INTL,0.092 ID X 0.18"OD,STL	78189	1202-00-00-0541C
					- - - * - - -		

http://manoman.sqhill.com

Fig. & Index No.	Tektronix Part No.	Serial/Model No. Eff	Dscont	Qty	1 2 3 4 5	Name & Description	Mfr Code	Mfr Part Number
2-	210-0406-00	B010100	B049999	4		. . NUT,PLAIN,HEX.:4-40 X 0.188 INCH,BRS	73743	2X12161-402
-162	401-0081-02	B010100	B049999	1		. . BEARING,CAM SW:FRONT	80009	401-0081-02
-163	407-0926-00	B010100	B049999	1		. . BRACKET,COVER:	80009	407-0926-00
-164	105-0278-00	B010100	B049999	1		. . ACTUATOR,CAM SW:TIME/CM B	80009	105-0278-00
						(ATTACHING PARTS)		
-165	354-0391-00	B010100	B049999	1		. . RING,RETAINING:0.395"FREE ID X 0.025" STL	97464	3100-43-CD
						- - - * - - -		
-166	214-1139-02	B010100	B049999	1		. . SPRING,FLAT:GREEN COLORED	80009	214-1139-02
	214-1139-03	B010100	B049999	1		. . SPRING,FLAT:RED COLORED	80009	214-1139-03
-167	214-1127-00	B010100	B049999	2		. . ROLLER,DETENT:0.125 DIA X 0.125 INCH L	80009	214-1127-00
-168	210-0406-00	B010100	B049999	4		. . NUT,PLAIN,HEX.:4-40 X 0.188 INCH,BRS	73743	2X12161-402
-169	401-0146-01	B010100	B049999	1		. . BEARING,CAM SW:CENTER	80009	401-0146-01
						(ATTACHING PARTS FOR ASSY)		
-170	211-0116-00	B010100	B049999	4		. SCR,ASSEM WSHR:4-40 X 0.312 INCH,PNH BRS	83385	OBD
-171	211-0180-00	B010100	B049999	2		. SCR,ASSEM WSHR:2-56 X 0.25 INCH,PNH BRS	83385	OBD
						- - - * - - -		
	105-0470-00	B050000		1		. ACTUATOR ASSY:CAM SW,TIME/CM	80009	105-0470-00
						(ATTACHING PARTS)		
	211-0116-00	B050000		6		. SCR,ASSEM WSHR:4-40 X 0.312 INCH,PNH BRS	83385	OBD
	211-0180-00	B050000		4		. SCR,ASSEM WSHR:2-56 X 0.25 INCH,PNH BRS	83385	OBD
						- - - * - - -		
	----- -----			-		. . ACTR ASSY INCLUDES:		
-172	200-1551-00	B050000		1		. . COVER,CAM SW:	80009	200-1551-00
						(ATTACHING PARTS)		
-173	211-0022-00	B050000		4		. . SCREW,MACHINE:2-56 X 0.188 INCH,PNH STL	83385	OBD
-174	210-0001-00	B050000		4		. . WASHER,LOCK:INTL,0.092 ID X 0.18"OD,STL	78189	1202-00-00-0541C
-175	211-0008-00	B050000		6		. . SCREW,MACHINE:4-40 X 0.25 INCH,PNH STL	83385	OBD
-176	210-0004-00	B050000		6		. . WASHER,LOCK:INTL,0.12 ID X 0.26"OD,STL	78189	1204-00-00-0541C
						- - - * - - -		
-177	131-0963-00	B050000		1		. . CONTACT,ELEC:GROUNDING	80009	131-0963-00
-178	210-0406-00	B050000		3		. . NUT,PLAIN,HEX.:4-40 X 0.188 INCH,BRS	73743	2X12161-402
-179	214-1139-02	B050000		1		. . SPRING,FLAT:GREEN COLORED	80009	214-1139-02
	214-1139-03	B050000		1		. . SPRING,FLAT:RED COLORED	80009	214-1139-03
-180	214-1127-00	B050000		2		. . ROLLER,DETENT:0.125 DIA X 0.125 INCH L	80009	214-1127-00
-181	401-0081-02	B050000		1		. . BEARING,CAM SW:FRONT	80009	401-0081-02
						(ATTACHING PARRTS)		
-182	354-0391-00	B050000		1		. . RING,RETAINING:0.395"FREE ID X 0.025" STL	97464	3100-43-CD
						- - - * - - -		
-183	105-0277-00	B050000		1		. . ACTUATOR,CAM SW:TIME/CM A	80009	105-0277-00
-184	407-0926-00	B050000		1		. . BRACKET,COVER:	80009	407-0926-00
	210-0406-00	B050000		4		. . NUT,PLAIN,HEX.:4-40 X 0.188 INCH,BRS	73743	2X12161-402
-185	401-0115-00	B050000		1		. . BEARING,CAM SW:CENTER	80009	401-0115-00
-186	407-0926-00	B050000		1		. . BRACKET,COVER:	80009	407-0926-00
-187	105-0471-00	B050000		1		. . ACTUATOR,CAM SW:TIME/CM B	80009	105-0471-00
						(ATTACHING PARTS)		
-188	354-0391-00	B050000		1		. . RING,RETAINING:0.395"FREE ID X 0.025" STL	97464	3100-43-CD
						- - - * - - -		
-189	214-1139-02	B050000		1		. . SPRING,FLAT:GREEN COLORED	80009	214-1139-02
	214-1139-03	B050000		1		. . SPRING,FLAT:RED COLORED	80009	214-1139-03
-190	214-1127-00	B050000		2		. . ROLLER,DETENT:0.125 DIA X 0.125 INCH L	80009	214-1127-00
-191	210-0406-00	B050000		4		. . NUT,PLAIN,HEX.:4-40 X 0.188 INCH,BRS	73743	2X12161-402
-192	401-0081-04	B050000		1		. . BEARING,CAM SW:W/INSERT	80009	401-0081-04
	105-0410-00	B050000		1		. . STOP,ROT.SHAFT:CAM SWITCH	80009	105-0410-00
-193	352-0350-00	B050000		1		. . . HOLDER,STOP PIN:		OBD
	213-0048-00	B050000		1		. . . SETSCREW:4-40 X 0.125 INCH,HEX SOC STL	74445	OBD
-194	105-0409-00	B050000		1		. . . STOP,SHAFT:CAM SW DRUM	80009	105-0409-00
-195	361-0535-00	B050000		1		. . . SPACER,RING:0.130 ID X 0.18 INCH OD	80009	361-0535-00
-196	354-0291-00	B050000		1		. . . RING,RETAINING:	97464	2000-12CD
-197	214-1812-00	B050000		1		. . . SPR,HLCL,TRSN:.832 OD,LOOP ENDS,MUW		OBD
-198	344-0244-00			2		. CLIP,COMP MTG:HORIZ PRESS MT	80009	344-0244-00
						(ATTACHING PARTS FOR EACH)		
-199	361-0007-00			1		. SPACER,SLEEVE:0.250 INCH DIA,PLASTIC	80009	361-0007-00
						- - - * - - -		

http://manoman.sqhill.com

Fig. & Index No.	Tektronix Part No.	Serial/Model No. Eff	Dscont	Qty	1 2 3 4 5 Name & Description	Mfr Code	Mfr Part Number
2-200	131-0604-00			52	. CONTACT,ELEC:CKT CD SW,SPR	80009	131-0604-00
-201	384-0405-00			1	. EXTENSION SHAFT:7.831 INCH LONG	80009	384-0405-00
-202	351-0180-00			1	. SLIDE,GUIDE:SWITCH ACTUATOR	80009	351-0180-00
-203	214-1136-00			1	. ACTUATOR,SL SW:DUAL DPST	80009	214-1136-00
	214-1190-00	B010100	B049999	1	. EXTENDER,RETRAC:	80009	214-1190-00
-204	214-1190-02	B050000		1	. EXTENDER,RETRAC:	80009	214-1190-02
	213-0075-00			1	. . SETSCREW:4-40 X 0.094 INCH,HEX SOC STL	000BK	OBD
	213-0239-00			1	. . SETSCREW:3-48 X 0.062 INCH,HEX SOC STL	71159	OBD
-205	----- -----			1	. RES.,VAR:(SEE R1400 EPL)		
					(ATTACHING PARTS)		
-206	210-0583-00			1	. NUT,PLAIN,HEX.:0.25-32 X 0.312 INCH,BRS	73743	2X20224-402
-207	210-0046-00			1	. WASHER,LOCK:INTL,0.26 ID X 0.40" OD,STL	78189	1214-05-00-0541C
					- - - * - - -		
-208	407-0803-00			1	. BRACKET,CMPNT:	80009	407-0803-00
-209	136-0252-04			3	. SOCKET,PIN TERM:0.188 INCH LONG	22526	75060
-210	136-0269-02			1	. SOCKET,PLUG-IN:14 CONTACT,LOW CLEARANCE	01295	C951401
-211	136-0461-00			6	. SKT,PL-IN ELEC:CKT CARD CONTACT	80009	136-0461-00
-212	147-0035-00			1	. MOTOR,DC:BRUSHLESS,10-15VDC,145MA	25088	1AD3001-0A
-213	426-0781-00			1	. MOUNT,MOTOR:	80009	426-0781-00
					(ATTACHING PARTS)		
-214	211-0097-00			2	. SCREW,MACHINE:4-40 X 0.312 INCH,PNH STL	83385	OBD
-215	210-0406-00			2	. NUT,PLAIN,HEX.:4-40 X 0.188 INCH,BRS	73743	2X12161-402
-216	210-0004-00			2	. WASHER,LOCK:INTL,0.12 ID X 0.26"OD,STL	78189	1204-00-00-0541C
					- - - * - - -		
-217	426-0781-00			1	. MOUNT,MOTOR:	80009	426-0781-00
					(ATTACHING PARTS)		
-218	211-0008-00			2	. SCREW,MACHINE:4-40 X 0.25 INCH,PNH STL	83385	OBD
					- - - * - - -		
-219	388-2667-00			1	. CKT BOARD:MOTOR INTERCONN	80009	388-2667-00
-220	337-0717-00			1	. SHIELD,CKT BD:HORIZONTAL AMPLIFIER	80009	337-0717-00
					(ATTACHING PARTS FOR CKT BD)		
	211-0207-00			6	SCR,ASSEM WSHR:4-40 X 0.312 INCH,PNH STL	83385	OBD
					- - - * - - -		
-221	386-2228-00			16	SUPPORT,CKT BD:PLASTIC	80009	386-2228-00
-222	----- -----			1	RES.,FXD:(SEE R691 EPL)		
					(ATTACHING PARTS)		
-223	211-0559-00			2	SCREW,MACHINE:6-32 X 0.375"100 DEG,FLH STL	83385	OBD
-224	210-0457-00			2	NUT,PLAIN,EXT W:6-32 X 0.312 INCH,STL	83385	OBD
-225	210-0949-00			2	WASHER,FLAT:0.141 ID X 0.50 INCH OD,BRS	12327	OBD
					- - - * - - -		
-226	386-2499-00			1	SUPPORT,SHIELD:TERMINATION	80009	386-2499-00
-227	337-1764-00			1	SHIELD,ELEC:TERMINATION	80009	337-1764-00
-228	260-0638-00			1	SW,THERMOSTATIC:10A,240V,OPEN 75 DEG C	93410	110-364
					(ATTACHING PARTS)		
-229	211-0105-00			2	SCREW,MACHINE:4-40 X 0.188"100 DEG,FLH STL	83385	OBD
-230	210-0586-00			2	NUT,PLAIN,EXT W:4-40 X 0.25 INCH,STL	78189	OBD
					- - - * - - -		
-231	343-0006-00[1]			1	CLAMP,LOOP:0.50 INCH DIAMETER,PLSTC	95987	1-2-6B
	343-0003-00[2]			1	CLAMP,LOOP:0.25 INCH DIA	95987	1-4 6R
					(ATTACHING PARTS)		
-232	210-0586-00			1	NUT,PLAIN,EXT W:4-40 X 0.25 INCH,STL	78189	OBD
-233	210-0863-00			1	WSHR,LOOP CLAMP:FOR 0.50" WIDE CLAMP,STL	95987	C191
					- - - * - - -		
-234	348-0063-00			2	GROMMET,PLASTIC:0.50 INCH DIA	80009	348-0063-00
-235	348-0064-00			1	GROMMET,PLASTIC:0.625 INCH DIA	80009	348-0064-00
-236	358-0215-00			1	GROMMET,PLASTIC:U SHAPED	80009	358-0215-00
-237	348-0051-00			1	GROMMET,RUBBER:0.938 INCH DIA	83907	1107
-238	348-0050-00			1	GROMMET,PLASTIC:0.75 INCH DIA	80009	348-0050-00
-239	348-0031-00	B010100	B079999X	2	GROMMET,PLASTIC:0.156 INCH DIA	80009	348-0031-00
-240	348-0056-00			1	GROMMET,PLASTIC:0.375 INCH DIA	80009	348-0056-00
-241	343-0213-00			3	CLAMP,LOOP:PRESS MT,PLASTIC	80009	343-0213-00
	343-0088-00			1	CLAMP,LOOP:0.062 INCH DIA	80009	343-0088-00

[1] 485 only
[2] 485-1 and 485-2 only.

http://manoman.sqhill.com

Fig. & Index No.	Tektronix Part No.	Serial/Model No. Eff	Dscont	Qty	1 2 3 4 5	Name & Description	Mfr Code	Mfr Part Number
2-242	220-0547-01			15		NUT,BLOCK:0.38 X 0.25 X 0.282"OA	80009	220-0547-01
						(ATTACHING PARTS FOR EACH)		
-243	211-0007-00			1		SCREW,MACHINE:4-40 X 0.188 INCH,PNH STL	83385	OBD
						- - - * - - -		
-244	220-0547-01			4		NUT,BLOCK:0.38 X 0.25 X 0.282"OA	80009	220-0547-01
						(ATTACHING PARTS FOR EACH)		
-245	211-0105-00			1		SCREW,MACHINE:4-40 X 0.188"100 DEG,FLH STL	83385	OBD
						- - - * - - -		
-246	369-0031-00	B010100	B079999	1		IMPLR,FAN,AXIAL:2.60 INCH OD,PLASTIC	80009	369-0031-00
	369-0031-01	B080000		1		IMPLR,FAN,CENTR:	80009	369-0031-01
	369-0031-00	B142990		1		IMPLR,FAN,AXIAL:2.60 INCH OD,PLASTIC	80009	369-0031-00
-247	149-0030-00	B010100	B079999X	1		METER,T TOTAL:CIRCUIT CARD MOUNT,DC	18583	120-LC
-248	260-1300-00			1		SWITCH,SLIDE:	82389	46206LFE
						(ATTACHING PARTS)		
-249	211-0020-00			2		SCREW,MACHINE:4-40 X 1.125 INCH,PNH STL	83385	OBD
-250	210-0586-00			2		NUT,PLAIN,EXT W:4-40 X 0.25 INCH,STL	78189	OBD
-251	210-0201-00			1		TERMINAL,LUG:SE #4	78189	2104-04-00-2520N
						- - - * - - -		
-252	380-0259-00			1		HSG,TIME METER:	80009	380-0259-00
-253	441-1051-00			1		CHAS,ELEC EQUIP:SUBPANEL ASSEMBLY	80009	441-1051-00
						(ATTACHING PARTS)		
	211-0012-00			2		SCREW,MACHINE:4-40 X 0.375 INCH,PNH STL	83385	OBD
	211-0541-00			2		SCREW,MACHINE:6-32 X 0.25"100 DEG,FLH STL	83385	OBD
						- - - * - - -		
	210-0659-01			8		. EYELET,METALLIC:0.121 OD X 0.156 INCH LONG	80009	210-0659-01
-254	200-0608-00			1		COVER,VAR RES.:PLASTIC	80009	200-0608-00
-255	----- -----			1		RES.,VAR:(SEE R1640 EPL)		
						(ATTACHING PARTS)		
-256	210-0583-00			2		NUT,PLAIN,HEX.:0.25-32 X 0.312 INCH,BRS	73743	2X20224-402
-257	210-0223-00			1		TERMINAL,LUG:0.25 INCH DIA,SE	86928	A313-136
						- - - * - - -		
-258	----- -----			1		RES.,VAR:(SEE R1799 EPL)		
						(ATTACHING PARTS)		
-259	210-0583-00			2		NUT,PLAIN,HEX.:0.25-32 X 0.312 INCH,BRS	73743	2X20224-402
-260	210-0046-00			1		WASHER,LOCK:INTL,0.26 ID X 0.40" OD,STL	78189	1214-05-00-0541C
						- - - * - - -		
-261	131-0771-00			2		CONNECTOR,RCPT,:4 CONT,QUICK DISCONNECT	0000A	R0A-304NYL
						(ATTACHING PARTS FOR EACH)		
-262	220-0551-00			1		NUT,PLAIN,HEX.:9 MM X 0.437 INCH	73743	OBD
-263	361-0428-00			1		SPACER,SLEEVE:0.36 ID X 0.30 INCH L,AL	80009	361-0428-00
						- - - * - - -		
-264	131-0955-00			2		CONNECTOR,RCPT,:BNC,FEMALE,W/HARDWARE	05091	31-279
						(ATTACHING PARTS FOR EACH)		
-265	210-0590-00			1		NUT,PLAIN,HEX.:0.375 X 0.438 INCH,STL	73743	2X28269-402
-266	210-0012-00			1		WASHER,LOCK:INTL,0.375 ID X 0.50" OD STL	78189	1220-02-00-0541C
						- - - * - - -		
-267	131-0955-00			2		CONNECTOR,RCPT,:BNC,FEMALE,W/HARDWARE	05091	31-279
						(ATTACHING PARTS FOR EACH)		
-268	210-0590-00			1		NUT,PLAIN,HEX.:0.375 X 0.438 INCH,STL	73743	2X28269-402
-269	210-0255-00			1		TERMINAL,LUG:0.391" ID INT TOOTH	80009	210-0255-00
						- - - * - - -		
-270	----- -----			1		RES.,VAR:(SEE R1790 EPL)		
						(ATTACHING PARTS)		
-271	358-0251-00			1		INSERT,SCR THD:0.25-32 X 0.424 INCH LONG	80009	358-0251-00
-272	210-0046-00			1		WASHER,LOCK:INTL,0.26 ID X 0.40" OD,STL	78189	1214-05-00-0541C
-273	210-0583-00			1		NUT,PLAIN,HEX.:0.25-32 X 0.312 INCH,BRS	73743	2X20224-402
						- - - * - - -		
-274	407-0971-00			1		BRACKET,CONN:REAR PANEL	80009	407-0971-00
						(ATTACHING PARTS)		
-275	211-0105-00			2		SCREW,MACHINE:4-40 X 0.188"100 DEG,FLH STL	83385	OBD
						- - - * - - -		
-276	366-1398-00			2		KNOB:ASTIG AND FOCUS	80009	366-1398-00

http://manoman.sqhill.com

Fig. & Index No.	Tektronix Part No.	Serial/Model No. Eff	Dscont	Qty	1 2 3 4 5	Name & Description	Mfr Code	Mfr Part Number
2-	213-0239-00			1		. SETSCREW:3-48 X 0.062 INCH,HEX SOC STL	71159	OBD
	380-0258-00	B010100	B079999	1		HSG,AIR FILTER:	80009	380-0258-00
-277	380-0258-02	B080000		1		HSG,AIR FILTER:	80009	380-0258-02
						(ATTACHING PARTS)		
-278	210-0586-00			4		NUT,PLAIN,EXT W:4-40 X 0.25 INCH,STL	78189	OBD
						- - - * - - -		
-279	378-0036-01			1		FIL ELEM AIR CO:2.25 X 3.063 INCH LG,FOAM	80009	378-0036-01
-280	378-0797-01			1		SCREEN,FAN:	80009	378-0797-01
-281	386-2051-01	B010100	B079999	1		PANEL,REAR:	80009	386-2051-01
	386-2051-01	B080000		1		PANEL,REAR:	80009	386-2051-01
						(ATTACHING PARTS)		
-282	211-0007-00			3		SCREW,MACHINE:4-40 X 0.188 INCH,PNH STL	83385	OBD
-283	211-0105-00			10		SCREW,MACHINE:4-40 X 0.188"100 DEG,FLH STL	83385	OBD
	198-2566-00			1		WIRE SET,ELEC:REAR COMB ASSEMBLY	80009	198-2566-00
	131-1119-00			2		. CONTACT,ELEC:FOR NO. 22-26 AWG WIRE	22526	75374-001
	131-0861-00			1		. CONTACT,ELEC:QUICK DISCONNECT	00779	42617-2
	175-1050-00			FT		. CABLE,SP,ELEC:2-COND,W/GRAYJACKET,120.0"L	80009	175-1050-00
	175-1296-00			FT		. CABLE,SP,ELEC:	80009	175-1296-00
	200-1075-00			2		. COVER,ELEC CONN:PLASTIC	00779	1-480435-0
	352-0171-00			3		. CONN BODY,PL,EL:1 WIRE BLACK	80009	352-0171-00
	352-0197-00			1		. CONN BODY,PL,EL:1 WIRE BLACK	80009	352-0197-00
						- - - * - - -		
-284	337-1880-00	XB030000		1		SHIELD,ELEC:OSCILLATION	80009	337-1880-00
						(ATTACHING PARTS)		
-285	211-0101-00	XB030000		8		SCREW,MACHINE:4-40 X 0.25" 100 DEG,FLH STL	83385	OBD
						- - - * - - -		
-286	200-1269-00			1		COVER,OSCP:REAR PANEL	80009	200-1269-00
-287	348-0298-00			2		FOOT,CABINET:	80009	348-0298-00
-288	348-0299-00			4		PAD,CAB FOOT:	80009	348-0299-00
						(ATTACHING PARTS FOR EACH)		
-289	211-0631-00			1		SCREW,MACHINE:6-32 X 2 INCH,FLH STL	83385	OBD
-290	166-0424-00			1		SPACER,SLEEVE:0.18 ID X 0.25 OD X 0.171"	80009	166-0424-00
						- - - * - - -		
	119-0346-00			1		FIL,LINE ASSY:	80009	119-0346-00
-291	----- -----			1		. CKT BOARD ASSY:LINE FILTER(SEE A16 EPL)		
-292	343-0088-00			1		. . CLAMP,LOOP:0.062 INCH DIA	80009	343-0088-00
-293	346-0032-00			3		. . STRAP,RETAINING:	98159	2829-75-4
	198-0689-00			1		. . WIRE SET,ELEC:FILTER RFI	80009	198-0689-00
	198-2873-00			1		. . WIRE SET,ELEC:LINE FILTER BOARD	80009	198-2873-00
-294	131-0861-00			2		. . . CONTACT,ELEC:QUICK DISCONNECT	00779	42617-2
-295	200-1075-00			2		. . . COVER,ELEC CONN:PLASTIC	00779	1-480435-0
						(ATTACHING PARTS FOR CKT BD)		
-296	211-0007-00	B010100	B059999	3		. SCREW,MACHINE:4-40 X 0.188 INCH,PNH STL	83385	OBD
	129-0285-00	B060000		3		. POST,ELEC-MECH:0.281 L X 0.188 HEX BRS	80009	129-0285-00
	210-0004-00	B060000		3		. WASHER,LOCK:INTL,0.12 ID X 0.26"OD,STL	78189	1204-00-00-0541C
	210-0801-00	B060000		3		. WASHER,FLAT:0.14 ID X 0.28I OD NP STL	12327	OBD
						- - - * - - -		
-297	161-0049-00			1		. CABLE ASSY,PWR,:80 INCH LONG,W/MALE CONN	80009	161-0049-00
-298	358-0161-00			1		. BSHG,STRAIN RLF:FOR 0.50 INCH HOLE,PLASTIC	28520	SR5P4
-299	386-2053-00			1		. PLATE,MOUNTING:POWER CORD	80009	386-2053-00
						(ATTACHING PARTS)		
-300	211-0007-00			2		. SCREW,MACHINE:4-40 X 0.188 INCH,PNH STL	83385	OBD
						- - - * - - -		
-301	204-0374-01			1		. BODY,FUSEHOLDER:	80009	204-0374-01
-302	407-1046-00			1		. BRKT,FUSE HLDR:	80009	407-1046-00
-303	129-0285-00	B010100	B010499	3		. POST,ELEC-MECH:0.281 L X 0.188 HEX BRS	80009	129-0285-00
						(ATTACHING PARTS FOR EACH)		
-304	211-0105-00	B010100	B010499	1		. SCREW,MACHINE:4-40 X 0.188"100 DEG,FLH STL	83385	OBD
-305	210-0004-00	B010100	B010499	1		. WASHER,LOCK:INTL,0.12 ID X 0.26"OD,STL	78189	1204-00-00-0541C
	210-0006-00	B010100	B010499	1		. WASHER,LOCK:INTL,0.146 IDX 0.288 OD,STL	78189	1206-00-00-0541C
						- - - * - - -		
	166-0026-00	B010500		3		. SPACER,SLEEVE:0.125 ID X 0.188 OD X 0.375"	71590	P7610-1

http://manoman.sqhill.com

Fig. & Index No.	Tektronix Part No.	Serial/Model No. Eff	Dscont	Qty	1 2 3 4 5	Name & Description	Mfr Code	Mfr Part Number
2-306	210-0201-00			1		. TERMINAL,LUG:SE #4	78189	2104-04-00-2520N
						(ATTACHING PARTS)		
-307	211-0007-00			1		. SCREW,MACHINE:4-40 X 0.188 INCH,PNH STL	83385	OBD
-308	210-0406-00			1		. NUT,PLAIN,HEX.:4-40 X 0.188 INCH,BRS	73743	2X12161-402
						- - - * - - -		
-309	380-0252-00			1		. HSG,LINE FILTER:	80009	380-0252-00
						(ATTACHING PARTS FOR ASSY)		
-310	211-0007-00			5		SCREW,MACHINE:4-40 X 0.188 INCH,PNH STL	83385	OBD
						- - - * - - -		
-311	352-0326-00			1		FUSEHOLDER:PLASTIC	80009	352-0326-00

http://manoman.sqhill.com

Fig. & Index No.	Tektronix Part No.	Serial/Model No. Eff	Dscont	Qty	1 2 3 4 5	Name & Description	Mfr Code	Mfr Part Number
3-1	200-1251-00			1		COVER,OSCP:FRONT	80009	200-1251-00
-2	200-0602-00			2		COVER,HDL LATCH:2.12 DIA X .7,ACETAL	80009	200-0602-00
-3	367-0153-00	B010100	B142694	1		HANDLE,CARRYING:	80009	367-0153-00
	367-0193-00	B142695		1		HANDLE,CARRYING:	80009	367-0193-00
						(ATTACHING PARTS)		
-4	211-0512-00	B010100	B142694	4		SCREW,MACHINE:6-32 X 0.50" 100 DEG,FLH STL	83385	OBD
	213-0227-00	B142695		4		SCR,TPG,THD FOR:6-32 X 0.50 DEG,FLH ST	83385	OBD
-5	214-0516-00			2		SPRING,HLCPS:0.959 DIA X 1.250 INCH LONG	80009	214-0516-00
-6	213-0139-00			2		SCR,CAP,HEX HD:10-24 X 0.375 INCH LONG	14438	OBD
-7	210-0805-00			2		WASHER,FLAT:0.204 ID X 0.438 INCH OD,STL	12327	OBD
-8	214-0513-00	B010100	B081609	2		HUB,HDL INDEX:	80009	214-0513-00
	214-0513-04	B081610	B142694	2		INDEX,HDL RING:2.0 DIA X .585 THK AL,CD	80009	214-0513-04
	214-1987-00	B142695		2		INDEX,HDL RING:	80009	214-1987-00
-9	214-0515-00	B010100	B081609	2		GEAR,HDL INDEX:	80009	214-0515-00
	214-0515-02	B081610		2		HUB,HDL INDEX:1.42 DIA X .565 THK,AL CD	80009	214-0515-02
						- - - * - - -		
-10	348-0235-00			4		SHLD GSKT,ELEC:4.734 INCH LONG	80009	348-0235-00
-11	348-0304-00			4		SHLD,GSKT,ELEC:3.018 INCH LONG	80009	348-0304-00
-12	390-0224-00			1		CABINET,OSCP:WRAPAROUND	80009	390-0224-00
-13	348-0080-00			4		. FOOT,CABINET:0.700 DIA X 0.500" LG,PLASTIC	80009	348-0080-00
-14	334-1934-00			1		PLATE,IDENT:	80009	334-1934-00
	016-0558-00			1		ADPTR,RACK MTG:KIT	80009	016-0558-00
-15	367-0022-00			2		. HANDLE,BOW:1.5 X 4.5 INCH	06540	10353-B-1032-25A
						(ATTACHING PARTS FOR EACH)		
-16	213-0090-00			2		. SCREW,MACHINE:10-32 X 0.50 INCH,HEX	83385	OBD
						- - - * - - -		
-17	361-0528-00			2		. SPACER,BAR:RACK MOUNTING	80009	361-0528-00
						(ATTACHING PARTS)		
-18	211-0517-00			2		. SCREW,MACHINE:6-32 X 1 INCH,PNH,STL	83385	OBD
-19	210-0870-00			2		. WASHER,FLAT:0.14 ID X 0.312 INCH OD STL	12327	OBD
						- - - * - - -		
-20	210-0808-00			2		. EYELET,METALLIC:CENTERING	63743	2515113-3TP-909
						(ATTACHING PARTS)		
-21	211-0507-00			1		. SCREW,MACHINE:6-32 X 0.312 INCH,PNH STL	83385	OBD
-22	210-0457-00			1		. NUT,PLAIN,EXT W:6-32 X 0.312 INCH,STL	83385	OBD
						- - - * - - -		
-23	348-0235-00			4		. SHLD GSKT,ELEC:4.734 INCH LONG	80009	348-0235-00
-24	348-0304-00			4		. SHLD GSKT,ELEC:3.018 INCH LONG	80009	348-0304-00
-25	351-0104-00			1		. SLIDE SECT.,DWR:PAIR	06666	C-720-2
-26	351-0101-00			1		. SLIDE,DWR,EXT:PAIR	80009	351-0101-00
-27	437-0151-00			1		. CABINET,OSCP:	80009	437-0151-00
	016-0099-00			1		. MANUAL,TECH:RACKMOUNT HDW	80009	016-0099-00

http://manoman.sqhill.com

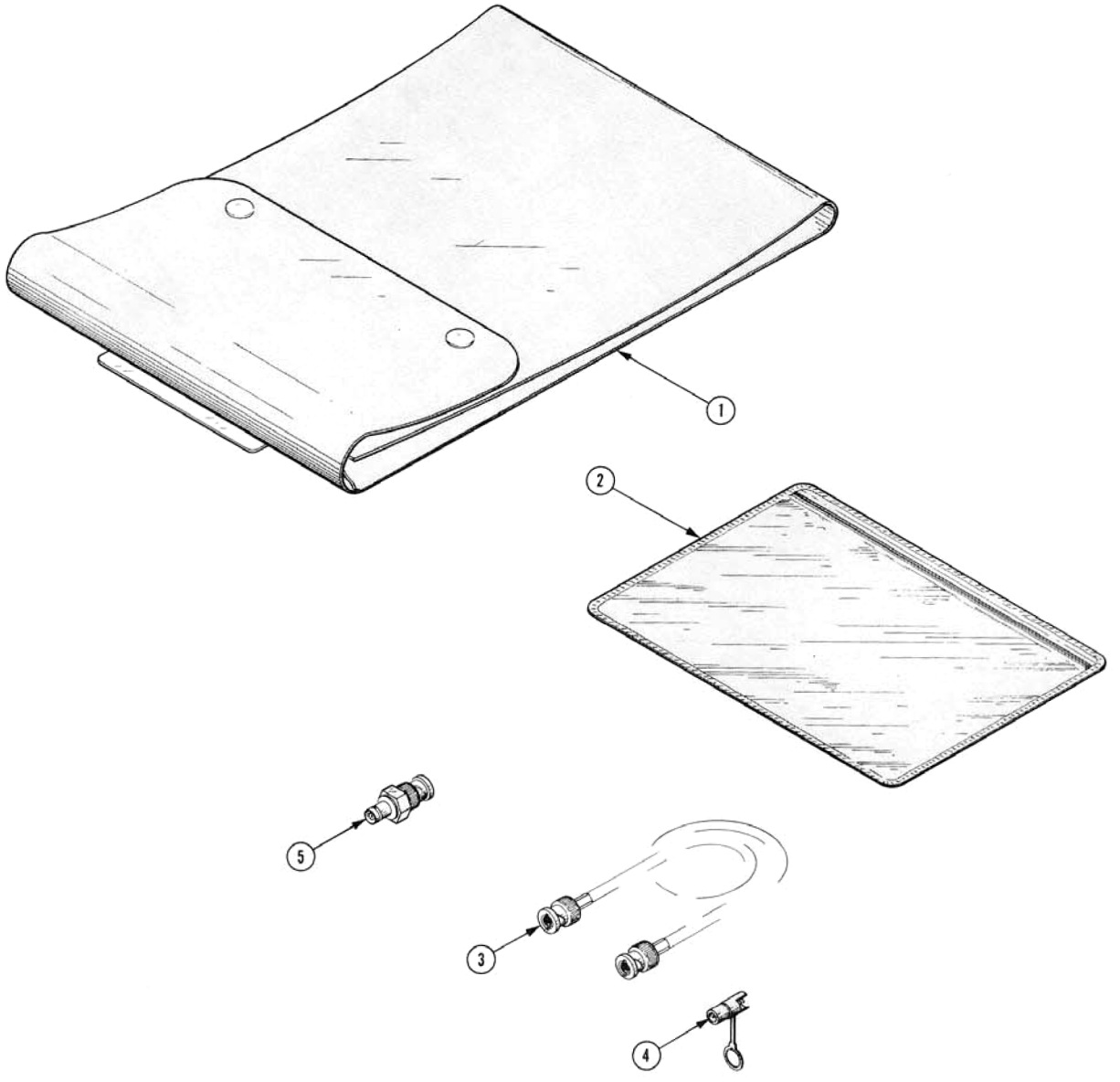

Fig. & Index No.	Tektronix Part No.	Serial/Model No. Eff	Dscont	Qty	1 2 3 4 5	Name & Description	Mfr Code	Mfr Part Number
4-1	016-0535-00			1		POUCH,ACCESSORY:W/HARDWARE	80009	016-0535-00
-2	016-0537-00			1		POUCH,ACCESSORY:VINYLE,W/ZIPPER	05006	OBD
-3	012-0076-00			1		CABLE ASSY,RF:50 OHM COAX,W/BNC EA END,20" L	80009	012-0076-00
-4	012-0092-00			2		ADAPTER,CONN:	80009	012-0092-00
-5	011-0049-01			2		NTWK,IMPD MATC:50 OHM FEEDTHRU	80009	011-0049-01
	070-1194-00			1		MANUAL,TECH:OPERATORS	80009	070-1194-00
	070-1193-00			1		MANUAL,TECH:INSTRUCTION	80009	070-1193-00
	386-0118-00			1		SHIELD,IMPLOSION:	80009	386-0118-00
	159-0015-00			4		FUSE,CARTRIDGE:3AG,3A,250V,FAST BLOW	71400	AGC 3

http://manoman.sqhill.com

MANUAL CHANGE INFORMATION

At Tektronix, we continually strive to keep up with latest electronic developments by adding circuit and component improvements to our instruments as soon as they are developed and tested.

Sometimes, due to printing and shipping requirements, we can't get these changes immediately into printed manuals. Hence, your manual may contain new change information on following pages.

A single change may affect several sections. Since the change information sheets are carried in the manual until all changes are permanently entered, some duplication may occur. If no such change pages appear following this page, your manual is correct as printed.

SERVICE NOTE

Because of the universal parts procurement problem, some electrical parts in your instrument may be different from those described in the Replaceable Electrical Parts List. The parts used will in no way alter or compromise the performance or reliability of this instrument. They are installed when necessary to ensure prompt delivery to the customer. Order replacement parts from the Replaceable Electrical Parts List.

http://manoman.sqhill.com

CALIBRATION TEST EQUIPMENT REPLACEMENT

Calibration Test Equipment Chart

This chart compares TM 500 product performance to that of older Tektronix equipment. Only those characteristics where significant specification differences occur, are listed. In some cases the new instrument may not be a total functional replacement. Additional support instrumentation may be needed or a change in calibration procedure may be necessary.

Comparison of Main Characteristics

DM 501 replaces 7D13		
PG 501 replaces 107	PG 501 - Risetime less than 3.5 ns into 50 Ω.	107 - Risetime less than 3.0 ns into 50 Ω.
108	PG 501 - 5 V output pulse; 3.5 ns Risetime	108 - 10 V output pulse 1 ns Risetime
PG 502 replaces 107		
108	PG 502 - 5 V output	108 - 10 V output
111	PG 502 - Risetime less than 1 ns; 10 ns Pretrigger pulse delay	111 - Risetime 0.5 ns; 30 to 250 ns Pretrigger pulse delay
PG 508 replaces 114	Performance of replacement equipment is the same or better than equipment being replaced.	
115		
2101		
PG 506 replaces 106	PG 506 - Positive-going trigger output signal at least 1 V; High Amplitude output, 60 V.	106 - Positive and Negative-going trigger output signal, 50 ns and 1 V; High Amplitude output, 100 V.
067-0502-01	PG 506 - Does not have chopped feature.	0502-01 - Comparator output can be alternately chopped to a reference voltage.
SG 503 replaces 190, 190A, 190B	SG 503 - Amplitude range 5 mV to 5.5 V p-p.	190B - Amplitude range 40 mV to 10 V p-p.
191		
067-0532-01	SG 503 - Frequency range 250 kHz to 250 MHz.	0532-01 - Frequency range 65 MHz to 500 MHz.
SG 504 replaces 067-0532-01	SG 504 - Frequency range 245 MHz to 1050 MHz.	0532-01 - Frequency range 65 MHz to 500 MHz.
067-0650-00		
TG 501 replaces 180, 180A	TG 501 - Trigger,output-slaved to marker output from 5 sec through 100 ns. One time-mark can be generated at a time.	180A - Trigger pulses 1, 10, 100 Hz; 1, 10, and 100 kHz. Multiple time-marks can be generated simultaneously.
181		181 - Multiple time-marks
184	TG 501 - Trigger output-slaved to market output from 5 sec through 100 ns. One time-mark can be generated at a time.	184 - Separate trigger pulses of 1 and 0.1 sec; 10, 1, and 0.1 ms; 10 and 1 μs.
2901	TG 501 - Trigger output-slaved to marker output from 5 sec through 100 ns. One time-mark can be generated at a time.	2901 - Separate trigger pulses, from 5 sec to 0.1 μs. Multiple time-marks can be generated simultaneously.

NOTE: All TM 500 generator outputs are short-proof. All TM 500 plug-in instruments require TM 500-Series Power Module.

REV B, JUN 1978

http://manoman.sqhill.com

TEKTRONIX®
committed to technical excellence

MANUAL CHANGE INFORMATION

PRODUCT 485/R485
070-1193-00

CHANGE REFERENCE M34869
DATE 9-12-78

CHANGE:	DESCRIPTION

EFF SN B155790

ELECTRICAL PARTS LIST AND SCHEMATIC CHANGES

CHANGE TO:

A3	670-1512-02	CKT BOARD ASSY:HI Z(485,485-1)
R1	317-0047-00	RES.,FXD,CMPSN:4.7 OHM,5%,0.125W

ADD:

Q1	151-0188-00	TRANSISTOR:SILICON,PNP,2N3906
R4	315-0681-00	RES.,FXD,CMPSN:680 OHM,5%,0.25W
R5	315-0752-00	RES.,FXD,CMPSN:7.5K OHM,5%,0.25W

REMOVE:

C4	283-0204-00	CAP.,FXD,CER DI:0.01UF,20%,50V

DIAGRAM 1 CH 1 & CH 2 ATTENUATORS - Partial

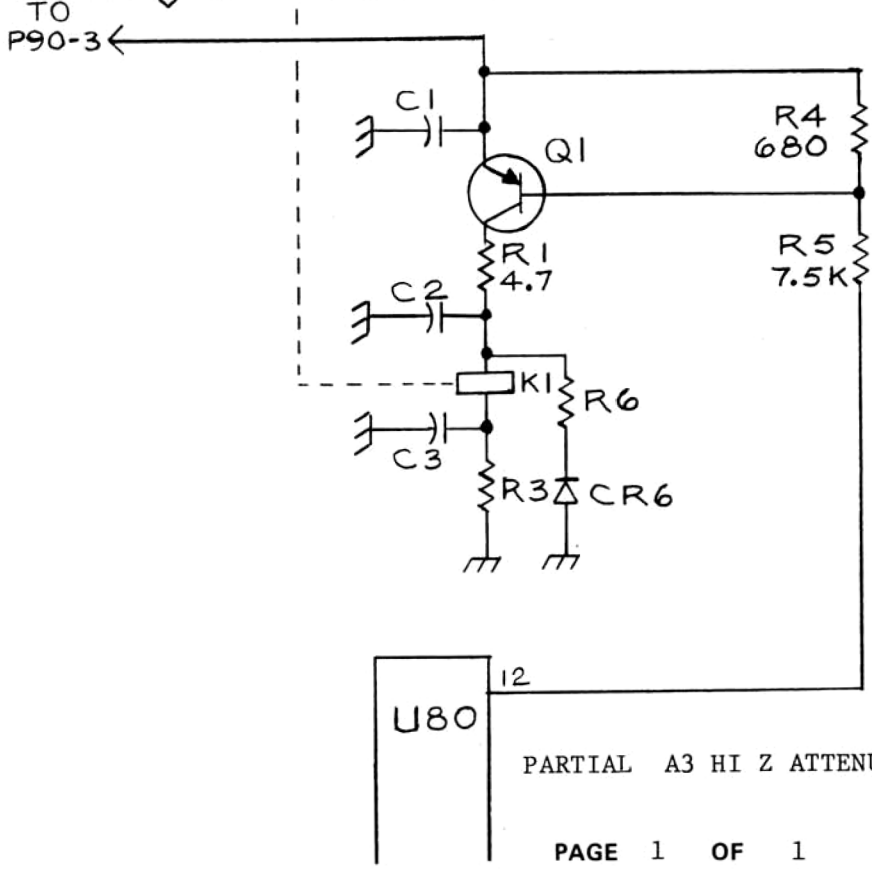

PARTIAL A3 HI Z ATTENUATOR BOARD

http://manoman.sqhill.com

TEKTRONIX®
committed to technical excellence

MANUAL CHANGE INFORMATION

PRODUCT 485
070-1193-00

CHANGE REFERENCE M35808
DATE 2-5-79 REV.

CHANGE:	DESCRIPTION

EFF SN B160000

ELECTRICAL PARTS LIST AND SCHEMATIC CHANGES

CHANGE TO:

A3(2)	670-1512-04	CKT BOARD ASSY:HI Z(485,485-1)
A4(2)	670-2564-02	CKT BOARD ASSY:LOW Z CONTROL(485-2)
A7	670-1662-01	CKT BOARD ASSY:VERTICAL
K1	650-0563-00	RELAY ASSY:WITH ADAPTER BOARD
K410	650-0562-00	RELAY ASSY:WITH ADAPTER BOARD

ADD:

C11	281-0627-00	CAP.,FXD,CER DI:1PF,+/-0.25PF,500V

K1 and KS1 are removed from the A3 or A4 boards and mounted on an adapter board. The adapter board connects with wire leads and soldered connections to original K1 and KS1 mounting points on the A3 or A4 board. C11 is added to the A3 or A4 board. This affects A3 CH 1 and CH 2 HI Z attenuator boards, or A4 CH 1 and CH 2 LO Z attenuator boards, see partial ◇1◇. K410, S1 and S2 are removed from the A7 VERTICAL board and mounted on an adapter board that connects to the original K410, S1 and S2 mounting points on the A7 VERTICAL board through soldered pins. This affects VERTICAL CHANNEL SWITCHING diagram 3.

http://manoman.sqhill.com

CHANGE:	DESCRIPTION

DIAGRAM <1> CH 1 & CH 2 ATTENUATORS - Partial

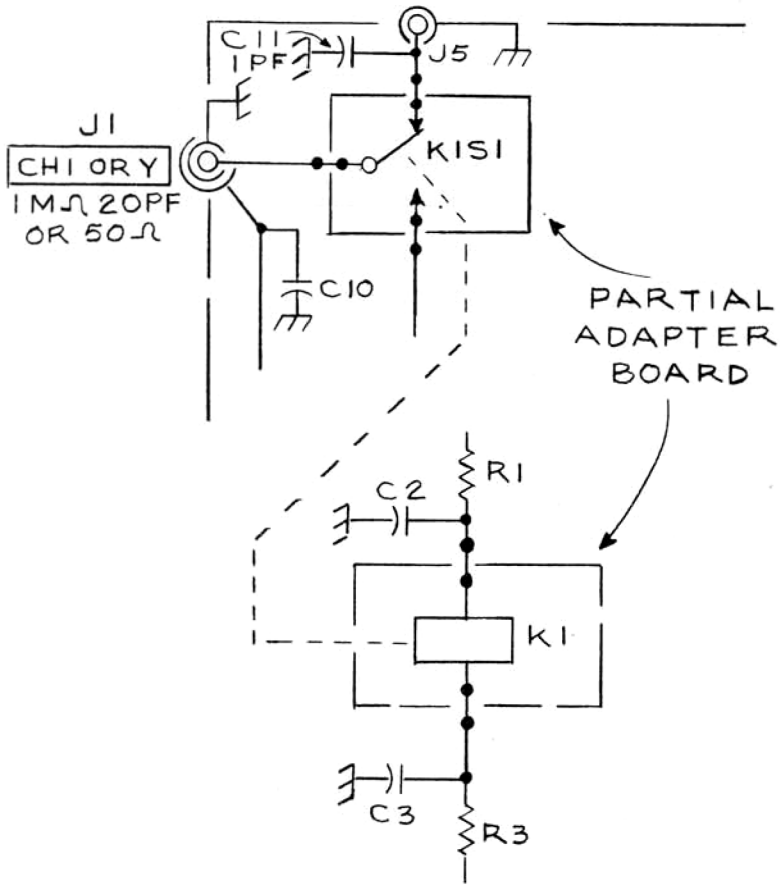

http://manoman.sqhill.com